MADE IN BANGLADESH: SCALE-APPROPRIATE MACHINERY FOR AGRICULTURAL RESOURCE CONSERVATION

Timothy J. Krupnik, Santiago Santos Valle, Andrew J. McDonald, Scott Justice, Israil Hossain and Mahesh K. Gathala

Technical Drawings: Santiago Santos Valle

CIMMYT

MADE IN BANGLADESH:
SCALE-APPROPRIATE MACHINERY FOR AGRICULTURAL RESOURCE CONSERVATION

Made in Bangladesh: Scale-appropriate machinery for agricultural resource conservation

Authors: Timothy J. Krupnik, Santiago Santos Valle, Andrew J. McDonald, Scott Justice, Israil Hossain and Mahesh K. Gathala

Technical Drawings: Santiago Santos Valle

Keywords: Farm machinery, zero tillage, strip tillage, conservation agriculture, surface water irrigation, bed planting, axial flow pump, South Asia.

For publications:

Headquartered in Mexico, the International Maize and Wheat Improvement Center (known by its Spanish acronym, CIMMYT) is a not-for-profit agriculture research and training organization. The center works to reduce poverty and hunger by sustainably increasing the productivity of maize and wheat in the developing world. CIMMYT maintains the world's largest maize and wheat seed bank and is best known for initiating the Green Revolution, which saved millions of lives across Asia and for which CIMMYT's Dr. Norman Borlaug was awarded the Nobel Peace Prize. CIMMYT is a member of the CGIAR Consortium and receives support from national governments, foundations, development banks, and other public and private agencies.

© International Maize and Wheat Improvement Center (CIMMYT) 2013. All rights reserved. The designations employed in the presentation of materials in this publication do not imply the expression of any opinion whatsoever on the part of CIMMYT or its contributory organizations concerning the legal status of any country, territory, city, or area, or of its authorities, or concerning the delimitation of its frontiers or boundaries. The opinions expressed are those of the author(s), and are not necessarily those of CIMMYT or our partners. CIMMYT encourages fair use of this material. Proper citation is requested.

Correct citation: Krupnik, T.J., S. Santos Valle, A.J. McDonald, S. Justice, I. Hossain, and M.K. Gathala. 2013. Made in Bangladesh: Scale-appropriate machinery for agricultural resource conservation. Mexico, D.F.: CIMMYT.

AGROVOC Descriptors Farm equipment; Zero tillage; Strip cropping; Surface water; Irrigation; Planting methods; Crop management; South Asia; Conservation tillage; Pumps; Farming systems; Resource conservation; Small farms; Bangladesh.

AGRIS category codes: N20 Agricultural Machinery and Equipment
P01 Nature Conservation and Land Resources

Dewey decimal classification: 621.85492 KRU

ISBN: 978-607-8263-33-2

Cover photo: Santiago Santos Valle

Printed in Bangladesh.
December, 2013

Layout | Design | Print: Color Horizon
www.colorhorizon.com.bd

Foreword

I am pleased to present the book *Made in Bangladesh: Scale-appropriate machinery for agricultural resource conservation*, on innovative farming practices and scale-appropriate farm machinery, in collaboration with CIMMYT and the Bangladesh Agricultural Research Council (BARC). The book deals with conservation agriculture (CA)-based mechanization in Bangladesh, which has already gained attention nationally and beyond to move agriculture to sustainability. The existing pressure on Bangladeshi agriculture due to overpopulation and environmental and social threats to resources necessitates new ways to produce more food using fewer inputs. CA-based mechanization is a proven and available solution that benefits both farmers and the environment. The series of technologies covered in this book are in line with the needs of Bangladeshi farmers, who are adopting them as part of their practices and thereby advancing towards more sustainable agriculture. However, farmers are not only the target of resource-conserving practices; these practices are suitable for a whole chain of actors including public and private institutions, agro-based industries, manufacturers, service providers, and extension officers, to name several. The fact that these technologies are being used and developed in Bangladesh farm settings highlights the important role of the manufacturing industry as the provider and developer of technologies suited to farmers in developing countries. This role must be supported by continuous research for development that starts with the promotion of innovations, such as the use of technical drawings and capacity-building for manufacturers, which are the two main targets of this book. If manufacturers are able to perfect machinery production, their products will become competitive with those of foreign suppliers, reducing the dependence of local farmers on more expensive imported machinery. But let's not forget that quality is a must to achieve this, because farmers will not use or buy machines that are not reliable. Thus, providing quality machinery is critical for the success of CA programs in Bangladesh and other developing countries. Also important is the timely availability of spare parts, which affects the promotion and use of new machinery. Therefore, I believe that the work and machinery described herein will address these constraints and further their local manufacture. CIMMYT and the Bangladesh Agricultural Research Institute (BARI), in cooperation with BARC, are working together in the design, refinement and promotion of such tools. Our coordinated efforts are important for success, and I am confident that BARC/BARI and CIMMYT, together with other relevant partners, can bring about a significant change in CA-based mechanization in this country. At the same time I believe that translation of this book into Bangla will make it user-friendly, which will benefit Bangladeshi manufacturers, scientists, public-private institutions, and non-governmental organizations (NGOs). Personally, I see this book as a potential tool to promote resource-conserving technologies for agriculture, boosting their use and production, together with an improvement in the manufacturing processes. With its designs and images the book can have impacts locally and beyond.

Wais Kabir
Executive Chairman
Bangladesh Agricultural Research Council (BARC)

The book was developed by the International Maize and Wheat Center (CIMMYT) as part of a collaboration with three internationally funded projects: the Cereal Systems Initiative for South Asia - Mechanization and Irrigation (CSISA-MI) initiative, which is made possible with the generous support of the United States Agency for International Development (USAID) Mission in Bangladesh. Funding was also granted through the European Union (EU)-funded Agriculture, Nutrition and Extension Project (ANEP), and the Australian Centre for International Agricultural Research (ACIAR) Rice-Maize Project.

USAID FROM THE AMERICAN PEOPLE

This project is funded by The European Union

Australian Government
Australian Centre for International Agricultural Research

The CSISA-MI initiative is a partnership between CIMMYT and International Development Enterprises (iDE), and is funded by USAID under President Obama's Feed the Future (FtF) Initiative. CSISA-MI seeks to transform agriculture in southern Bangladesh by unlocking the productivity of the region's farmers during the dry season through surface water irrigation, efficient agricultural machinery, and local service provision. CSISA-MI is an initiative of the wider USAID-funded CSISA program in Bangladesh (CSISA-BD), which is a partnership between CIMMYT, the International Rice Research Institute (IRRI), and WorldFish.

The Agriculture and Nutrition Extension Project (ANEP) is a partnership between iDE, WorldFish, CIMMYT, IRRI, Save the Children International, CODEC, CEAPRED, and BES, and is funded by the EU. The project seeks to sustainably raise agricultural productivity and promote effective market linkages to improve the nutrition of poor rural and urban households in southern Bangladesh and the Nepal plains.

The ACIAR funded (CIM-2007-122) IRRI-CIMMYT alliance project "Sustainable Intensification of Rice-Maize (R-M) Production Systems in Bangladesh" has an overcharging goal is to increase income, reduce poverty and hunger, improve the quality of life, and conserve natural resources in rural areas of Bangladesh by empowering farmers with ecologically and economically sound R-M systems that match their specific requirements in selected irrigated and favorable rainfed R-M areas.

Parts of this book were made possible through support provided by USAID. The contents and opinions expressed herein are those of the author(s) and do not necessarily reflect the views of USAID or the United States Government and shall not be used for advertising or product endorsement purposes.

This publication has been produced with the assistance of the EU. The contents of this publication are the sole responsibility of CIMMYT and can in no way be taken to reflect the views of the EU.

Preface

This book was developed to share knowledge and innovative ideas regarding resource-conserving agricultural machinery that has emerged or been adapted and adopted by farmers in Bangladesh. Despite our focus on Bangladesh, the machinery described has worldwide applicability for smallholder farmers using two-wheeled hand tractor implements. This book is a result of the collaboration and enthusiastic sharing of information among government research institutes, agricultural extension agencies, rural development institutions, international agricultural research centers, and innovative machinery manufacturers throughout Bangladesh. We would like first to thank Dr. Wais Kabir, Executive Chairman of the BARC, for writing the foreword. We also extend sincere thanks to Mr. Eng. Md. Arshadul Hoque, Senior Scientific Officer of BARI's Farm Machinery and Postharvest Process Engineering Division (FMPPE), for his help in translating this volume to Bangla. Other FMPPE colleagues who deserve special thanks for their support to CIMMYT over the years include: Eng. Md. Shoeb Hassan, Chief Scientific Officer and Head; Dr. Eng. Ayub Hossain, Senior Scientific Officer; Mr. Kowshik Kumar Saha, Scientific Officer; and Mr. Md. Jubair Hasan, Sub-Assistant Engineer. CIMMYT International Communications staff members Scott Mall and Mike Listman and contract editor Debra Mullan deserve thanks for copy and style editing.

CIMMYT's partners in various government departments in Bangladesh deserve special recognition for their support and encouragement over the years. We wish to thank Dr. Sattar Mandal, Professor of Agricultural Economics, Former Vice-Chancellor of Bangladesh Agricultural University, Mymensingh and Former Member, Agriculture, Water Resources & Rural Institutions Division, Planning Commission, Government of Bangladesh, for his ideas, support, and encouragement in promoting scale-appropriate mechanization in agriculture. Both the current and former Honorable Secretaries of Agriculture, Dr. Nazmul Islam and Mr. Monzur Hossain, have welcomed CIMMYT collaboration to promote smart agricultural mechanization. Dr. Sultan Ahmed, Chief Scientific Officer of BARC's Agricultural Engineering Unit, has supported our work on surface water irrigation. The Director General of the Department of Agricultural Extension, Dr. Makul Chandra Roy, has been equally supportive and enthusiastic, which we greatly appreciate. Our colleagues at the Bangladesh Agricultural Development Corporation (BADC) deserve a vote of thanks, specifically Mr. Md. Hahir Uddin Ahmed, BADC's Chairman, Mr. Khalilur Rahman, Chief Engineer, and Mr. Md. Easin Ali Sarker, Deputy Chief Engineer.

Importantly, this book could not have been completed without the support of CIMMYT's colleagues at USAID in Bangladesh, who have consistently supported the development and research projects under the umbrella of CSISA, most notably: Mr. Richard Greene, former USAID Bangladesh Mission Director; Mrs. Ramona El Hamzaoui, Director, USAID-Bangladesh Economic Growth Office; Dr. David Yanggen, former Deputy Director, USAID-Bangladesh Economic Growth Office; and Mr. Anar Khalilov, Senior Food Security Advisor. Our colleagues in the European Union donor community and the Australian Centre for International Agricultural Research also deserve our warm thanks. Our colleagues at Cornell University's USDA-funded Food for Progress Project in Bangladesh, Dr. John Duxbury, Dr. Julie Lauren, and Dr. G.M. Panaullah, also deserve recognition for their work in researching and expanding bed planting practices.

In addition to chapter authors, many other people at CIMMYT worked to help prepare this book. Dr. Bruno Gérard, Director, Global Conservation Agriculture Program, has consistently encouraged and supported our efforts. Dr. T.P. Tiwari, Country Liaison Officer and Cropping Systems Agronomist, and Dr. Fred Rossi, Socioeconomist, provided support and useful comments on various chapters. Dr. Shafiq Islam, Training Officer, helped organize training to pre-test the training module chapter. The following individuals were instrumental in pushing the book through the administrative steps to publication: Mr. Raihan Saddatt, Administrative & Finance Manager; Mr. Dhon Raj Lama, Administrative Assistant; and Ms. Runa Laila, Financial Assistant. We also wish to thank our CIMMYT agronomist and extension colleagues in the CSISA and Agriculture, Nutrition and Extension projects, namely Mr. Anarul Haque, Dr. Dinabandhu Pandit, Dr. Mohi Uddin, Dr. Samina Yasmin, Dr. Md Shahjahan, Dr. Abdul Momin, and Dr. Md. Yusuf Ali.

Several colleagues from the International Rice Research Institute deserve special thanks, including: Dr. Debadish Chandna, Senior Specialist-Postharvest & Business Model Development; Mr. Christian Portal, Former Chief of Party, CSISA-BD Project; Dr. Paul Fox, IRRI Bangladesh Representative; and Mr. Timothy Russell, Chief of Party, CSISA-BD Project. Colleagues from the World Fish Center have been consistently supportive of CIMMYT's work on the technologies in this book, building on their long experience with agricultural mechanization in Bangladesh: Dr. Craig Meisner, Country Director, South Asia; and Mr. Kevin Kamp, Country Manager-Aquatic Agricultural Systems and Deputy Regional Director. We are proud to have worked in collaboration with these CGIAR centers.

CIMMYT-Bangladesh has also had a burgeoning and energetic collaboration with key development partners, most notably from iDE: Mr. Rajiv Pradhan, Senior Technical Advisor, South East Asia-Swisscontact, and former Country Director of iDEBangladesh; Mr. Deepak Khadka, Country Director of iDE-Bangladesh; Mr. Richard Rose, Manager, Technology Portfolio; Mr. F. Connor Riggs, Manager, WASH Portfolio; Dr. Enamul Haque, Team Leader-Conservation Agriculture Project; Mr. Arefin Khan, Manager-Private Sector Engagement; Mr. Md. Afzal Hossain Bhuiyan, Manager-Public Sector Engagement; and Mr. Badrul Alam.

Last but not least, we wish to thank our supporters in the private sector, who have enthusiastically begun to design, manufacture, and promote various adaptations of the technologies described in this book, including the RFL Pran Group, Solar International, ACI Motors Limited, Mahabub Engineering, Reshma Engineering Works, and especially Jaunata Engineering.

To all the people named above, and to any we may have unwittingly forgotten, we thank you for your many years of effort, support, and enthusiastic push to continue to innovate and develop progressively more and more appropriate machinery that conserves agricultural resources and benefits farmers in Bangladesh and beyond.

Mr. Santiago Santos Valle
Agricultural Engineer

Dr. Timothy J. Krupnik
Agronomist, International Maize and Wheat Improvement Center

Acronyms and abbreviations

AFP	Axial flow pump
AMM	Agricultural machinery manufacturer
BARI	Bangladesh Agricultural Research Centre
BHP	Brake horsepower
CA	Conservation agriculture
CAD	Computer-aided design
CIMMYT	International Maize and Wheat Improvement Center
kPa	Kilo Pascal
h	Hour
ha	Hectare
HDPE	High-density polyethylene
HP	Horsepower
IRRI	International Rice Research Institute
l	Litre
LLP	Low lift pump
m	Meters
m2	Square meters
m3	Cubic meters
MIG	Metal inert gas
mm	Milimeters
NGO	Non-governmental organization
PTFE	Polytetrafluoroethylene
PTOS	Power tiller operated system
R	Radius
s	Second
ST	Strip tillage
t	Tonnes
TIG	Tungsten inert gas
WHP	Water horsepower
ZT	Zero tillage
2WT	Two-wheel tractor
Ø	Diameter
----	Hidden shape

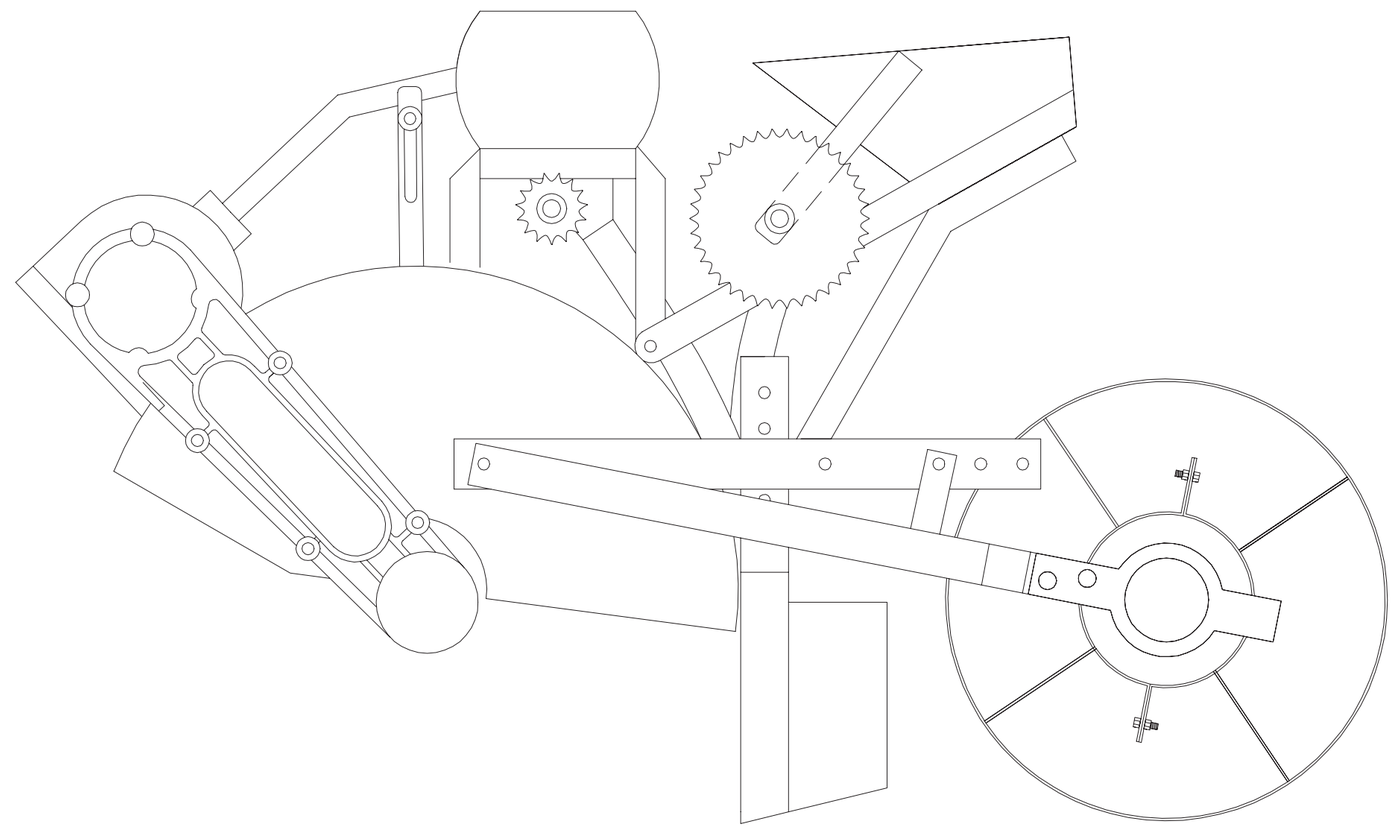

Table of contents

Foreword iii

Preface v

Acronyms and Abbreviations vi

Chapter 1:
Introduction 1
Timothy J. Krupnik

Chapter 2:
Instructions: How to use this book 7
Santiago Santos Valle and Timothy J. Krupnik

Chapter 3:
Zero till drill for two-wheeled tractors 11
Israil Hossain, Timothy J. Krupnik, and Santiago Santos Valle

Chapter 4:
Bed planting options for two-wheeled tractors 27
Timothy J. Krupnik, Israil Hossain, and Santiago Santos Valle

Chapter 5:
Two-wheeled-tractor-based strip tillage practices 49
Israil Hossain, Timothy J. Krupnik, and Santiago Santos Valle

Chapter 6:
The axial flow pump for surface water irrigation, drainage, and fisheries 65
Scott Justice, Andrew McDonald, Timothy J. Krupnik, and Santiago Santos Valle

Chapter 7:
Improved blades and tines for seed drills used with two-wheel tractors in conservation agriculture 79
Santiago Santos Valle, Timothy J. Krupnik, and Mahesh Gathala

Chapter 8:
Fluted rollers for metering seed and fertilizer 89
Timothy J. Krupnik and Santiago Santos Valle

Chapter 9:
Inclined plate seed metering system 99
Santiago Santos Valle and Timothy J. Krupnik

Chapter 10:
Introduction to technical designs for agricultural machinery manufacturers: A learning module 109
Santiago Santos Valle and Timothy J. Krupnik

Glossary 119

Photo: Color Horizon

CHAPTER

1

Introduction

Introduction

If you take a moment to look at the tags on your clothing, there is a high likelihood that you will find the words "Made in Bangladesh" stitched into the label. Bangladesh is one of the world's leading garment manufacturers and exporters (Mottaleb 2011). There is a good chance that you and most people you know wear shirts, trousers, or other clothing that is "Made in Bangladesh." In this sense, Bangladesh has extended its reach throughout the world. Nonetheless, Bangladesh's garment industry - and indeed the country itself - suffer from a lack of positive public image. To non-residents, mentions of "Bangladesh" usually conjure up images of political conflict, corruption, famine, flooding, and most recently the April 2013 Savar garment factory building collapse that resulted in 1,129 tragic and completely unnecessary deaths. Fueled by pervasive international media attention to crises rather than progress, the words "Made in Bangladesh," and indeed most references to Bangladesh, are rarely associated with the positive.

But this narrow and negative interpretation of the country obscures the everyday reality of life in Bangladesh. While indeed burdened with pressing environmental, economic justice, and governance problems, Bangladesh is as also a hotspot for instructive and inspiring innovation. Each morning, the country's 150 million-plus people wake and find creative solutions to the problems that they face, despite being ranked 146th on the global human development index and with roughly half the per capita income of neighboring India (UNDP 2013), the people of Bangladesh work in inspiring ways to improve their livelihoods and carry their country forward. Bangladesh's agriculture sector contributes 19 percent to the country's gross domestic product (MoA 2013). In an effort to meet the food demands of a population growing at an annual rate of 1.3 percent (UN DATA 2013), Bangladeshi farmers have increased cropping intensity (defined as the number of crops grown on the same unit of land per calendar year) to an average of 191 percent (MoA 2013), a remarkable achievement. As such, all that is made or produced in Bangladesh is not negative.

Agriculture is the focus of this book. Bangladesh's near self-sufficiency in rice production and rapid development of the agricultural sector (Ganesh-Kumar et al. 2012; Goletti 1994) - in a nation of over 150 million people, 70 percent of whom live in rural areas, and a population density over 1,000 people per square kilometer (UN DATA 2013) - serves as an example from which many new countries and burgeoning agricultural economies can learn.

Traveling through the lush greenery of the Bangladeshi countryside, one observes a rich kaleidoscope of landscapes crisscrossed with numerous small fields, rivers, canals, ponds, and a bountiful diversity of crops. Lush rice paddies are interspersed with golden wheat, and fields of legumes of different sizes, shapes and growth habits are common. Tiny yellow mustard flowers make up an impressive mosaic, and bold sunflowers buttress the horizons. Two-wheeled hand tractors (2WT) comb back and forth across fields as farmers prepare the land for seeding or transplanting to generate income for households. Fields of towering maize, from which farmers sell grain to the expanding poultry industry, are increasingly common. Interspersed with tropical forest and bamboo groves, and offset by stunning red-orange sunsets, the beauty of the Bangladeshi countryside is not to be missed. And with a closer look at these fields, of which the average Bangladeshi household owns just 0.2 hectares (ha) or less (MOA and FAO 2012), one can see that farmers are continuously growing their crops in new ways, experimenting with different seed varieties, crop mixes, and implementing novel management practices that facilitate improved harvests, to meet their food and livelihood needs.

But while the landscape may appear idyllic, and while many advances towards food security have already been made, Bangladesh's farmers also face new challenges including climate change, rising temperatures,

Photo: Timothy J. Krupnik

Figure 1. Left: A *Dongfeng* two-wheel tractor with power tiller attachment in Barisal, Bangladesh. Note that the tractor has been pivoted on its wheels so that the engine points to the ground, allowing farmers to examine the power tiller blades attached in the rear. Right: *A Sifeng* two-wheel tractor with power tiller attachment on sale in Jessore, Bangladesh.

Photo: Timothy J. Krupnik

Figure 2. A power tiller attachment removed from its two-wheeled tractor. This attachment is used only for full tillage operations, and often for puddling soils before rice transplanting. Note the seat for riding and ease of operation. The power tiller would normally be hitched to the two-wheeled tractor by the joining unit which contains gears that interface with the tractor. In this photograph, the joining unit can be found in the bottom center.

and terminal heat stress (Mondal et al. 2013; Sarker et al. 2012b), all of which can adversely affect crops. Flooding, soil salinity, and declining water tables are concerns in select parts of the country (Brammer 2010; Chowdry 2010; MOA and FAO 2012). In an environment of increasing fuel prices for irrigation pumping, the latter is a serious issue. The rural labor force has also decreased by 42 percent between 1960 and today, driven by increasing migration to cities and growing non-farm employment opportunities. This has resulted in a 52 percent increase in rural labor costs in the last decade alone (IRRI 2013), making it difficult for many farmers to access and afford labor when and where it is needed. However, Bangladesh's farmers are continually adapting and developing new solutions for these problems. In response to mounting labor and fuel prices, many are using innovative agricultural machinery, much of which is made in Bangladesh, to improve the precision and speed of planting and harvesting operations, while reducing fuel and irrigation water requirements, labor demand, and increasing the inefficient use of inputs. In doing so, farmers rely on unique and scale-appropriate agricultural machinery that can be merged with 2WTs to enable these resource-conserving agricultural practices.

The improved machinery and attachments detailed in this book are all compatible with 2WTs. Following devastating cyclones in the 1980s that killed many draft animals, government policies promoted the importation and wide-scale use of Chinese-made 2WTs (Biggs et al. 2011).[1] Most 2WTs used in Bangladesh are made either by the Dongfeng or Sifeng companies in China (Figure 1). They feature 12- or 16-horsepower diesel engines and come with power-tiller attachments adapted by brand and are used primarily for tillage (Figure 2). The 2WTs are versatile: the power tillers can be detached and replaced with alternative, more innovative equipment that offers farmers diverse improved tools for land preparation, seeding, fertilizing and other operations (Figure 3). Their size and efficiency make 2WTs and their attachments particularly appropriate for smallholder farmers.

The attachments and machinery discussed in this book are made or widely used in Bangladesh and are compatible with conservation agriculture (CA) practices, which entail reduced tillage, the economically viable retention of crop residues on the soil surface, and use of crop rotations to build soil quality, conserve agricultural resources, and reduce production costs (Roy et al. 2009). We describe a selection of the many attachments built to work with 2WTs that benefit farmers by reducing land preparation time and related fuel requirements, as well as allowing farmers to seed and fertilize in a single operation.[2] Among other advantages, this fosters increased cropping intensity by reducing the turn-around time between the harvesting of one crop and seeding the next. There are 2WT attachments that can build raised planting beds, allowing farmers to channel irrigation through furrows to save water. Other 2WT attachments and equipment compatible with small engines can also save farmers from large expenditures for increasingly scarce and costly labor for harvesting operations. Similar machinery has enabled the expansion of irrigation and rapid post-harvest processing.

1 There are an estimated 400,000 active units or more in Bangladesh, making it one of the South Asia's most mechanized agricultural economies (Biggs et al. 2011; Sarker et al. 2012a).
2 Time- and energy-consuming conventional practices involved tilling a field three or more times with a power tiller, raking or laddering the field flat, and then transplanting or broadcasting seed and basal fertilizer.

Each chapter in this book focuses on a distinct 2WT-compatible machinery technology or issue. Following the introduction, the second chapter is designed to help readers understand and use simple technical drawings of the type used by agricultural engineers. The third chapter focuses on zero-tillage (ZT) seed and fertilizer drills developed by the engineers at the Bangladesh Agricultural Research Institute (BARI) and which support this key component of CA-based crop management. Chapter 4 presents bed planters, which can also be attached to 2WTs. In Chapter 5, technical drawings for 2WT-compatible strip tillage implements are presented and discussed. With strip tillage, only 25 percent of the soil surface is disturbed during seeding and basal fertilizer application (Morrison 2002). In Chapter 6, we shift focus to fuel-efficient surface water irrigation using axial flow pumps (AFPs), a technology widely used in industrial manufacturing and first adapted for agriculture by farmers in Vietnam (Biggs 2011). Axial pumps can be driven by 2WT engines through a simple coupling arrangement using V-belts. Chapters 7 and 8 emphasize some of the component parts necessary for the above-mentioned machines. Improved blades for use in strip tillage operations are detailed, as are fluted roller seed and fertilizer metering devices. Chapter 9 highlights inclined-plate seed metering systems, which are increasingly used for bed planters, strip, and zero-tillage 2WT attachments and are recommended for precision seeding. Finally, Chapter 10 moves from theory to practice by providing curricula and teaching materials for manufacturers who wish to use the book's technical designs to assemble 2WT-compatible machinery.

By providing detailed, scaled technical designs and descriptions of the equipment featured, we aim to open access to these technologies, promoting them to a wider audience in Bangladesh and beyond, and allowing expanded use of both the machinery and supported innovations. Intended audiences include researchers, engineers, policy makers, extensionists, members of NGOs working in agricultural development, and innovative farmers. We hope that machinery manufacturers will be able to use the technical drawings to replicate and improve upon the machinery designs provided, offering improved models for smallholder farming conditions.

In conclusion, the phrase "Made in Bangladesh" need not have negative connotation. The machines shown herein are testaments to the inspiring ways in which farmers, researchers, development practitioners and manufacturers in Bangladesh work together to develop resource-conserving solutions to pressing agricultural production problems, with benefits for smallholder farmers in Bangladesh and elsewhere.

Photo: Color Horizon

Figure 3. A *Dongfeng* two-wheel tractor with an attached improved seed and fertilizer drill configured for strip tillage operations. This attachment is sometimes referred to as a PTOS, or power-tiller operated seeder, although most PTOS configurations do not have both a seed and fertilizer box, as this unit does. On this model, the seating arrangement has been removed to allow the operator to walk behind the machine. The seat can be re-attached to allow easier transport down roads and between fields.

References

Biggs, D. 2011. Small machines in the garden: Everyday technology and revolution in the Mekong Delta. Modern Asian Studies. 46: 47-70.

Biggs, S., Justice, S., Lewis, D. 2011. Patterns of rural mechanisation, energy and employment in South Asia: Reopening the debate. Economic and political weekly. 46: 78-82.

Brammer, H. 2010. After the Bangladesh flood action plan: Looking to the future. Environmental Hazards. 9: 118-130.

Chowdry, N.T. 2010. Water management in Bangladesh: An analytical review. Water Policy. 12: 32-51.

Ganesh-Kumar, A., Prasad, S. K., Pullabhotla, H. 2012. Supply and demand for cereals in Bangladesh, 2010-2030. International Food Policy Research Institute. New Delhi, pp. 1-36.

Goletti, F. 1994. The changing public role in a rice economy approaching self-sufficiency. International Food Policy Research Institute. Washington, DC, pp. 1-108.

IRRI. 2013. World Rice Statistics. International Rice Rresearch Institute. Online: http://irri.org/index.php?option=com_k2&view=itemlist&task=category&id=744&lang=en. Verified: October 18 2013.

MoA. 2013. Bangladesh agriculture at a glance. Ministry of Agriculture (MoA). Government of the People's Republic of Bangladesh, Dhaka. Online: http://www.moa.gov.bd/statistics/bag.htm. Verified: October 18 2013.

MOA and FAO. 2012. Master plan for agricultural development in the southern region of Bangladesh. Ministry of Agriculture (MoA, Government of Bangladesh) and United Nations Food and Agriculture Organization. Dhaka, Bangladesh. Pp.1-122.

Mondal, S., Singh, R. P., Crossa, J., Huerta-Espino, J., Sharma, I., Chatrath, R., Singh, G. P., Sohu, V. S., Mavi, G. S.

Mottaleb, K. A. 2011. An inquiry into the rapid growth of the garment industry in Bangladesh. Economic Development and Cultural Change. 60: 67-89.

Roy, K. C., Haque, M. E., Justice, S., Hossain, I., Meisner, C. 2009. Development of tillage machinery for conservation agriculture in Bangladesh. Agricutural Mechinization in Asia, Africa, and Latin America. 40: 58-64.

Sarker, K. K., Xiaoyan, W., Hongwen, L., Chunlin, X., Jin, H., Jeff, E.R. 2012a. Development strategies of small scale conservation farming practices on two wheeled tractor in Bangladesh. African Journal of Agricultural Research. 7: 3747-3756.

Sarker, M. A. R., Alam, K., Gow, J. 2012b. Exploring the relationship between climate change and rice yield in Bangladesh: An analysis of time series data. Agricultural Systems. 112: 11-16.

Sukuru, V. S. P., Kalappanavar, I. K., Mishra, V. K., Hussain, M., Gautam, N. R., Uddin, J., Barma, N. C. D., Hakim, A., Joshi, A. K. 2013. Earliness in wheat: A key to adaptation under terminal and continual high temperature stress in South Asia. Field Crops Research. 151: 19-26.

Talukder, A. S., Meisner, C. A., Sarkar, M. A., Islam, M. S. 2010. Effect of water management, tillage options and phosphorus status on arsenic uptake in rice. Ecotoxicology and Environmental Safety. 74: 834-839.

UN DATA. 2013. Bangladesh: World statistics pocketbook. United Nations Statistics Division, New York. Online: http://data.un.org/CountryProfile.aspx?crName=Bangladesh. Verified: October 18 2013.

UNDP. 2013. Bangladesh country profile: Human development indicators. United Nations Development Program. Washington, DC. Online: http://hdrstats.undp.org/en/countries/profiles/BGD.html. Verified: October 18.

Photo: Timothy J. Krupnik

Photo: Sadia Rahman

CHAPTER 2

Instructions: How to use this book

Instructions: How to use this book

This book was developed as a tool for agricultural machinery manufacturers, farmers, agronomists, and rural development practitioners to improve their understanding of a particular series of scale-appropriate technologies increasingly used in Bangladesh and beyond, that can be used in combination with conservation agriculture-based crop management practices. Each chapter has been written in easy to understand, non-academic language, and consists of three parts. These include: (1) a written introduction to the technology in question; (2) photographic plates of the technology to illustrate how it is commonly used in field conditions or to highlight points underscored in the text; and (3) scaled technical designs developed in AutoCAD 2011 for Mac OS, developed by Autodesk, Inc. (San Rafael, California, USA.). The technical designs are the heart of the book - they have been developed so that manufacturers can easily replicate each piece of machinery in their own shops, in the hope that they will expand production and develop new and useful innovations. The text in each chapter describes the particular technical characteristics of each piece of featured agricultural machinery, sometimes accompanied by relevant data from field trials and research publications. The use of figures and illustrations is intended to complement the text and enable better understanding of the machinery.

The technical drawings, in particular, require special attention. Technical drawings are not always immediately easy for everyone to understand, especially if they are unacquainted with the concept. Admittedly, they require a certain level of abstraction and literacy if they are to be used as a complete resource; e.g., to manufacture a piece of equipment from scratch. We have included these materials in this book so that manufacturers, farmers, agronomists and others can begin to acquaint themselves with the technical aspects of each machine in detail. This is not to say that the designs are simple or incomplete; to the contrary, each technical drawing can be used to build a machine. Our hopes are that with proper training and backstopping, the designs can enable manufacturers to begin production themselves, thereby reducing the need to import particular machinery from abroad, increasing manufacturers' capacities, creating new business opportunities, and driving down sales prices compared to imported equipment which has heavy duty taxes.

Readers are advised to follow the instructions below carefully, to make proper use of the drawings. Further details on how to use the technical drawings - and in fact how to train others in their use - can be found in Chapter 10, a dedicated training module describing in detail how the technical designs can be interpreted. The passage below provides a brief explanation on this subject to help general readers understand the technical designs and to use them in interpreting this book.

How to use the technical drawings

When studying the technical drawings within this book, follow these steps to understand them clearly.

1. First and foremost, check the scale of the drawing. The scale can be found in the information box located at the bottom of the page of each technical design in each chapter. The scale informs the reader of the real size of the objects depicted on the page. By understanding the scale, the reader can derive all measurements for each machine, for example, the length, width, depth, etc. of each piece of machinery depicted. Scale is easy to understand with basic mathematics. For example, if the scale on a technical design is 1:2, but a particular dimension in question is 15 cm, use the following formula to determine the actual measurement:

$$\frac{Measurement\ in\ the\ drawing}{Real\ dimension} = \frac{1}{2}$$

So, using the information we have from the design, we enter it into the formula:

$$\frac{15\ cm}{Real\ dimension} = \frac{1}{2}$$

By cross-multiplying the numerator of the scale fraction to the real fraction (15/1, which equals 15 cm), we get:

15 cm x 2 = Real dimension x 1

Because the length of the drawing is 15 cm, we can then derive the following:

Real length = (15 cm x 2)/1 = 30 cm

1. The real length of the object is 30 cm. As you can see, the scale tells the reader about the size of objects in real life - in other words, the scale is the key with which the reader can derive the actual size of an object to be manufactured.

2. Another key point to understand is the following: if the size of a part of a machine shown on a technical drawing does not have a measured dimension, the reader can use a hand ruler to measure the dimension in question on paper, and then use the scale to derive the actual size themselves. This is the essence of a scaled technical design - all parts of the machine are in actual proportion to each other, following a rational system of representation.
3. Different scales are used throughout the book, depending on what was most appropriate for the technical design and in accordance with the size of the paper used (some are on A3-sized paper, which is 29.7 x 32 cm, and others on A4, which is 21 x 29.7 cm). This allows the reader to take measurements directly from the paper since the design is scaled to the paper size.
4. Pay careful attention to the measurement units used. This will facilitate the exact reproduction of the dimensions of the object pictured. The most common units used are centimeters (cm) and millimeters (mm). The dimensions on paper should be the same used by the reader when extrapolating the actual size of the object. In other words, never mix inches with centimeters, or millimeters with centimeters, etc.
5. Most importantly, if the reader wishes to copy and/or print pages of this book to share with others, he or she must print them on exactly the same size paper. Failure to do this will result in measurement errors, as the scale of the reproduction will no longer be correct.

We hope you find this book helpful!

Photo: Timothy J. Krupnik

Photo: Santiago Santos Valle

CHAPTER

3

Zero till drill for two-wheeled tractors

Zero till drill for two-wheeled tractors

The zero till (ZT) drill is a seeding machine compatible with Dongfeng two-wheeled tractors that was developed for use in CA crop management systems (Figures 1 and 2). The ZT drill can place seed and fertilizer into untilled, narrow (3-3.5 cm) slots in the soil while completely eliminating tillage, thereby providing an attractive alternative to more costly and time-consuming full inversion till systems. Unlike the ZT double disk system of furrow opening more commonly used with four-wheeled tractors, when ZT crops are sown with two-wheeled tractors, seeds are usually inserted into untilled soil through a narrow furrow opener usually referred to as an "inverted-T," descriptive of the shape of the opener. A press wheel is placed behind the furrow openers to tamp the soil down and close the furrow as the tractor moves forward. Fertilizer is placed in the same way. These practices allow the maintenance of moderate amounts of crop residues on the soil surface without incorporation. When used in suitable conditions, ZT has several potential advantages compared to full tillage: (1) the lack of soil inversion reduces soil water evaporation, especially when a suitable mulch of residues is maintained, meaning that soil moisture can be conserved for use by the crop; (2) where balanced soil fertility management is employed and adequate amounts of mulches are allocated, soil degradation can be reduced and often reversed; and (3) input costs can be reduced, most notably for increasingly costly tractor fuel, thereby offering immediate advantages to farmers (Erenstein and Laxmi 2008).

In Bangladesh, ZT direct seeded rice has achieved yields similar to puddle transplanted rice systems. This provides an option to reduce labor and total crop energy requirements while maintaining yield, thereby improving productivity (Johansen et al. 2012). Use of the ZT drill has been shown to save between 8 and 12 days of turn-around time between two crops, with crop establishment cost savings of 83 percent and 89 percent in wheat and maize, respectively, compared to inversion tillage and seeding, in the dry season in Bangladesh (Sarker et al. 2012). Use of the ZT drill, however, does have disadvantages common to those associated with machinery and CA-based crop practices. Among these: (1) because CA is knowledge-intensive, ZT drill operators must be carefully trained in proper use of the drill to assure proper seeding depth, rate, and consistency; (2) fields must be carefully controlled and free of weeds before planting; and (3) ZT drills will work best where land is properly leveled, though this still presents a challenge for smallholder farmers.

Photo: Israil Hossain

Figure 1. Two-wheeled-tractor-operated zero till drill.

The major components of the ZT planter are: (1) a hitch plate to link the drill to the tractor itself; (2) a toolbar frame upon which the seed and fertilizer boxes can be placed and furrow openers and other implements can be attached; (3) seed and fertilizer boxes with either fluted roller or inclined plate metering systems (Chapters 7 and 8 in this volume), or even "cup" type seed meters; (4) an improved "inverted T" furrow opener; and (5) the press wheel attachment (Figures 3 and 4). Up to four tines can be fitted to the tool bar when the most common model of the ZT drill is used with a two-wheeled tractor. The tines are made of 50 mm × 12 mm high-tensile steel (Table 1). Each tine is 700 mm long, and is fitted with a non-detachable point (which is tungsten-tipped), and a seed tube. Each tine is held in place with a holding bracket and is clamped to the toolbar by square 50 mm "U" bolts. With the most common two-wheeled tractor horsepower ratings (12-16 HP), the ZT drill can pull four tines in soils with low to medium soil strength, and three tines in high strength soils, provided there is no soil slippage. Hossain et al. (2009) showed that when wheat was planted with the ZT drill, yield was 14 percent higher than under conventional tillage with broadcast seeding followed by laddering, primarily because of increased lodging in the conventional plots. This was achieved with a cost reduction of 40 to 65 percent for crop establishment. The effective field capacity and planting cost of the ZT drill were 0.15 ha h-1 and approximately US$25 ha-1, respectively. Conversely, Meisner et al. (2004) also showed that wheat yield under ZT was significantly different and 0.42 tonnes ha-1 lower than conventionally drilled wheat. However, ZT planting costs were 82 percent lower than those for conventional methods. Thus, the ZT drill can constitute a viable option when farmers wish to reduce high production costs.

Photo: Israil Hossain

Figure 2. Zero till drill sowing wheat into rice straw and residues after rice harvest. Note the four rows into which seed and fertilizer are placed and the press wheels.

Photo: Santiago Santos Valle

Figure 3. Frontal view of the zero till drill, with the fertilizer box and the seed boxes mounted over the tool bar frame.

Photo: Santiago Santos Valle

Figure 4. Rear view of the zero till drill. Note the seed drop tubes and press wheels behind the four furrow openers.

References

Johansen, C., Haque, M. E., Bell, R. W., Thierfelder, C., Esdaile, R. J. 2012. Conservation agriculture for small holder rainfed farming: Opportunities and constraints of new mechanized seeding systems. Field Crops Research. 132: 18-32.

Erenstein, O., Laxmi, V. 2008. Zero tillage impacts in India's rice-wheat systems: A review. Soil Tillage and Research. 100: 1-14.

Esdaile, J., Bell, R. W., Hossain, M. I., Haque, M. E. 2009. Development of conservation farming implements for two-wheel tractors (power tillers) in Cambodia, Lao PDR and Bangladesh. Online: http://aciar.gov.au/publication/FR2010-20. Verified: June 22, 2012.

Hossain, M. I., Esdaile, J., Bell, R. W., Haque, M. E., Johansen, C. 2009. Development of a low-cost Two Wheel Tractor Operated No-Till Seeder for better establishment of upland crop. Eco-friendly Agriculture Journal. 2: 1-8.

Meisner, C. A., Hossain, M. I., Justice, S., Rashid, M. H., Sayre, K. 2004. Two-Wheel Tractor Operated Zero Till Seed Drill: A Viable Crop Establishment and Resource Conservation Option. International Commission of Agricultural and Biosystems Engineering. Collection of Extent Abstracts of 2004 CIGR International Conference (Volume. 2). Beijing, China.

Sarker, K. K., Xiaoyang, W., Hongwen, L., Chunlin, X., Wenying, L., Jin, H., Eisdale, J., Rasaily, R. G., and Xiaodong, Q. 2012. Development strategies of small scale conservation farming practices on two wheeled tractor in Bangladesh. African Journal of Agricultural Research. 7: 3747-3756.

Table 1. Primary technical characteristics of the furrow opening and covering implements of the zero till drill. Adapted from Esdaile et al. 2009.

Dimension

Dimension	Length	Material	Attachment to two-wheel tractor
50 × 12 mm	700 mm	High tensile steel	Holding bracket clamped into place by 50 mm 'U' bolts

Press wheels

Dimension	Length	Material	Attachment to two-wheel tractor
250 mm	50 mm	Metal inner and rim, plastic or rubber exterior	Placed on a central axle that trails the two-wheel tractor (2WT). Joined to the 2WT by two attachments to the tool bar.

Photo: Santiago Santos Valle

Figure 5. Major components of the zero till drill: **1.** chain for metering systems; **2.** chain to tractor axle; **3.** toolbar frame; **4.** seed box with inclined plate metering system; **5.** fertilizer box with fluted roller metering system; **6.** delivery tubes; **7.** press wheels; and **8.** furrow opener.

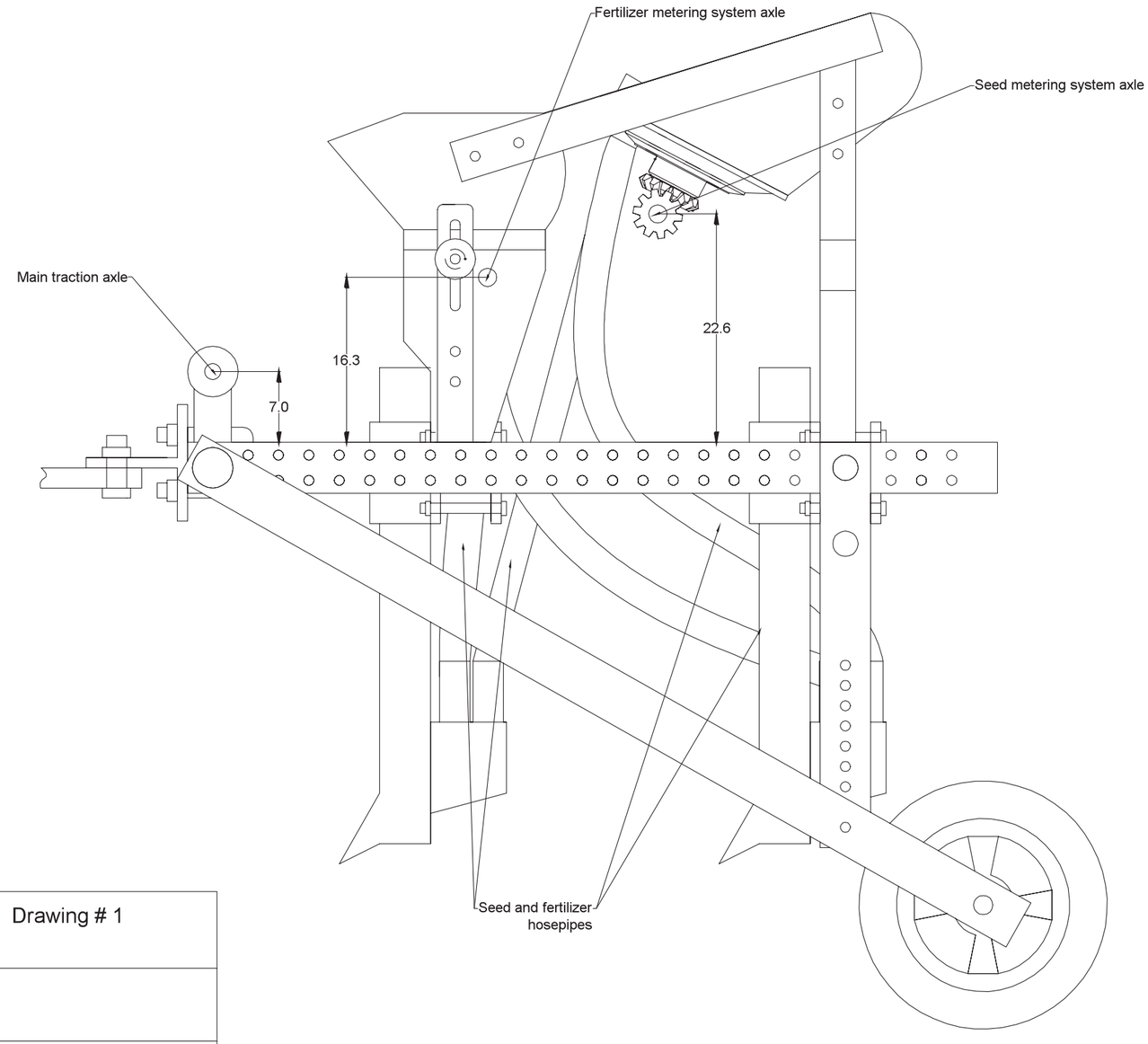

Zero till drill for two wheeled tractors	Drawing # 1
Complete side view	
Scale 1:5 // Dimensions in cm (centimeters)	

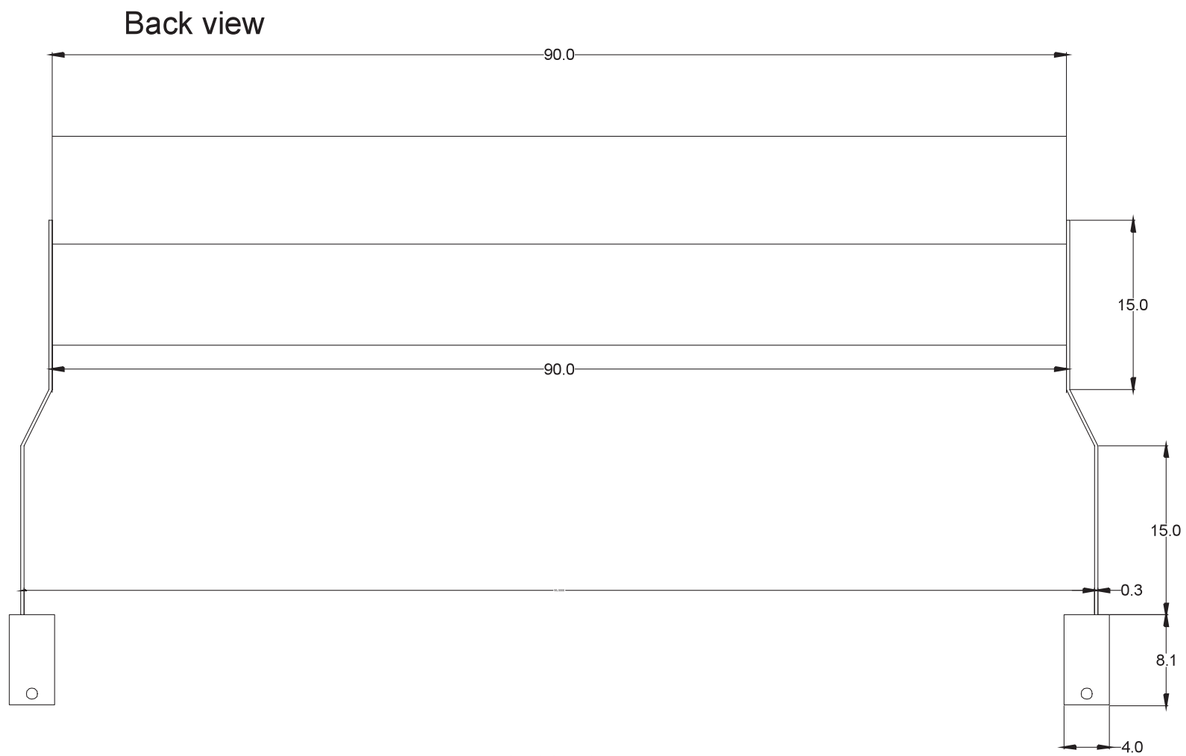

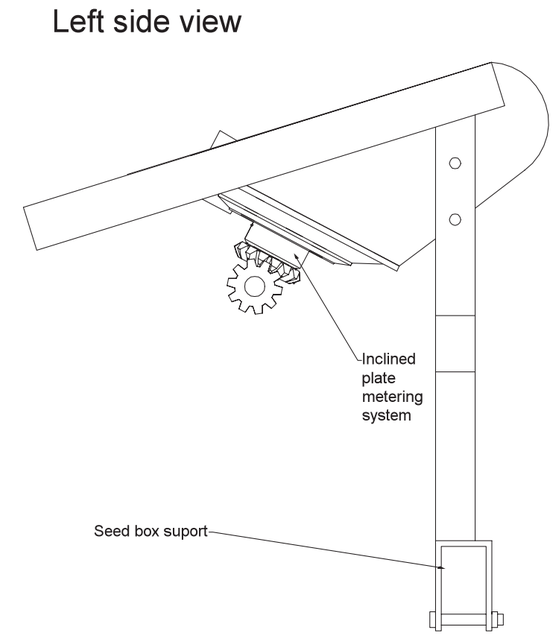

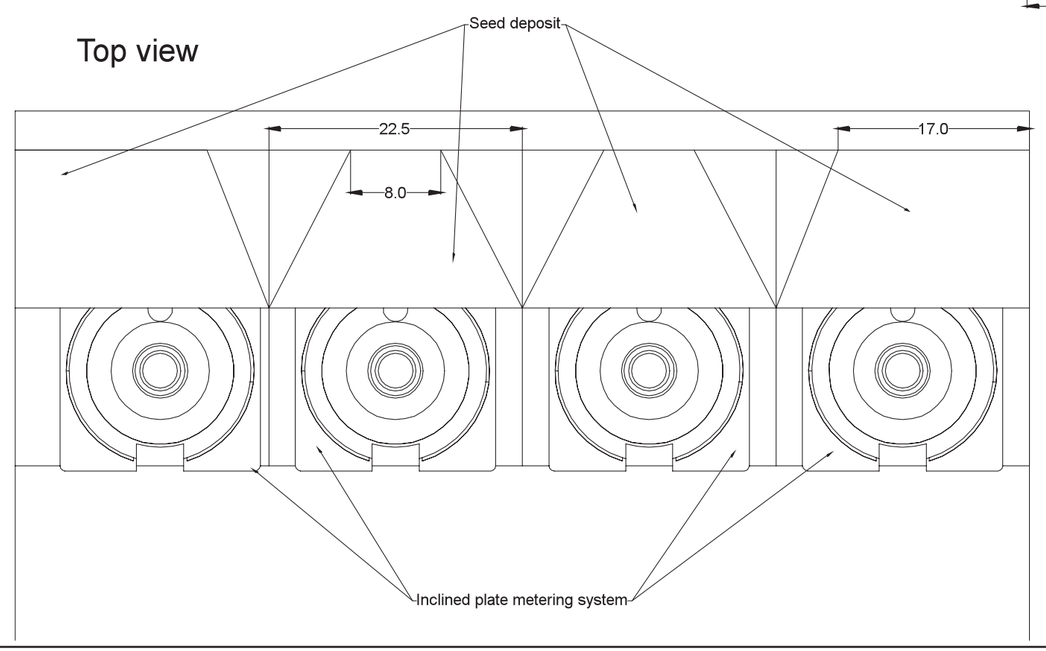

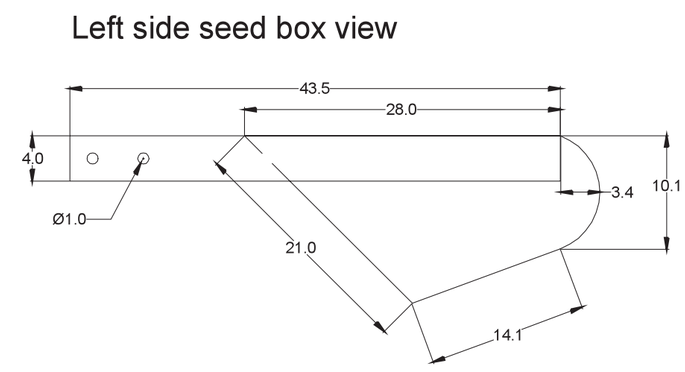

Zero till drill for two wheeled tractors	Drawing # 2
Back, top and side views of the fertilizer box	
Scale 1:5 // Dimensions in cm (centimeters)	

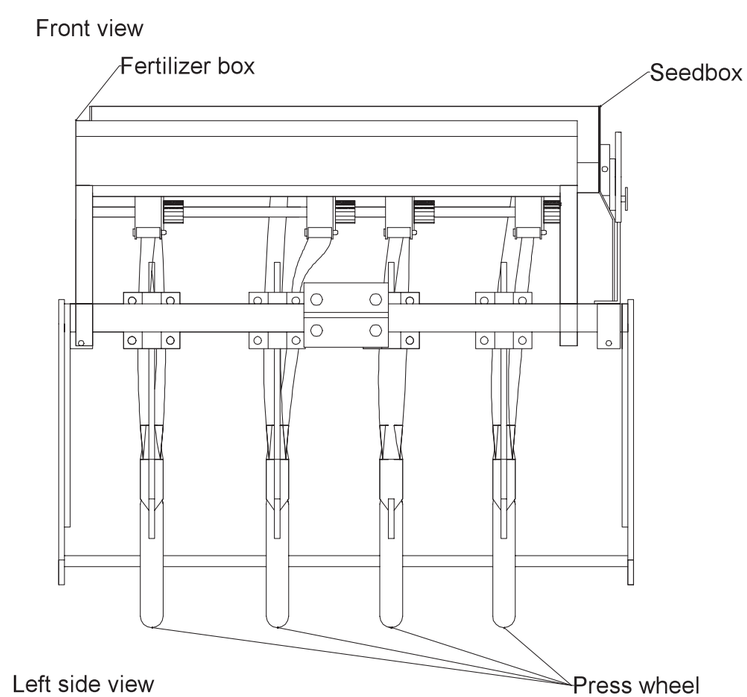

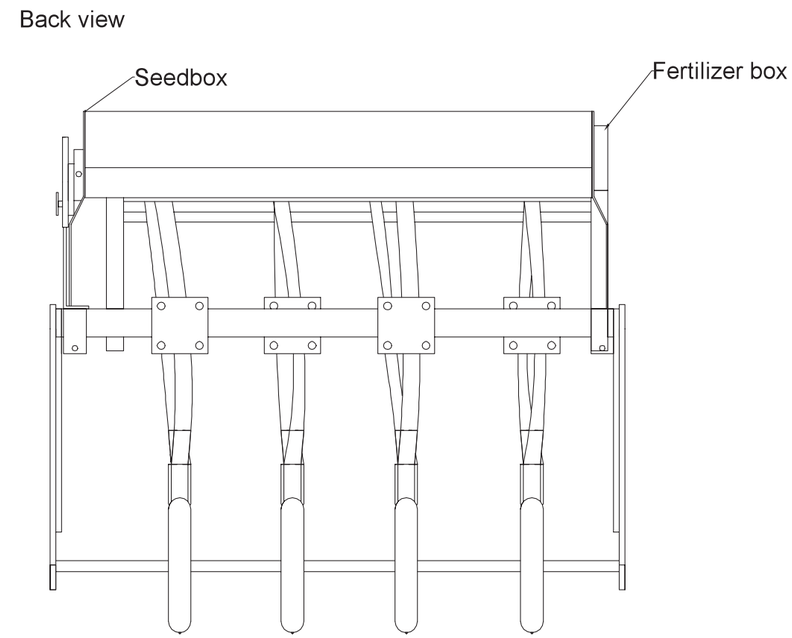

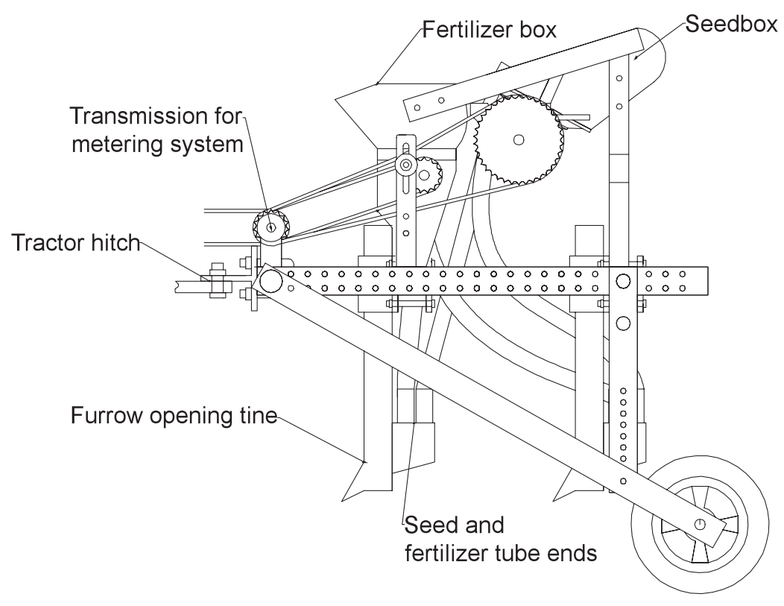

Zero till drill for two wheeled tractors	Drawing # 3
Front, side and back complete views with full equipment	
Scale 1:10 // Dimensions in cm (centimeters)	

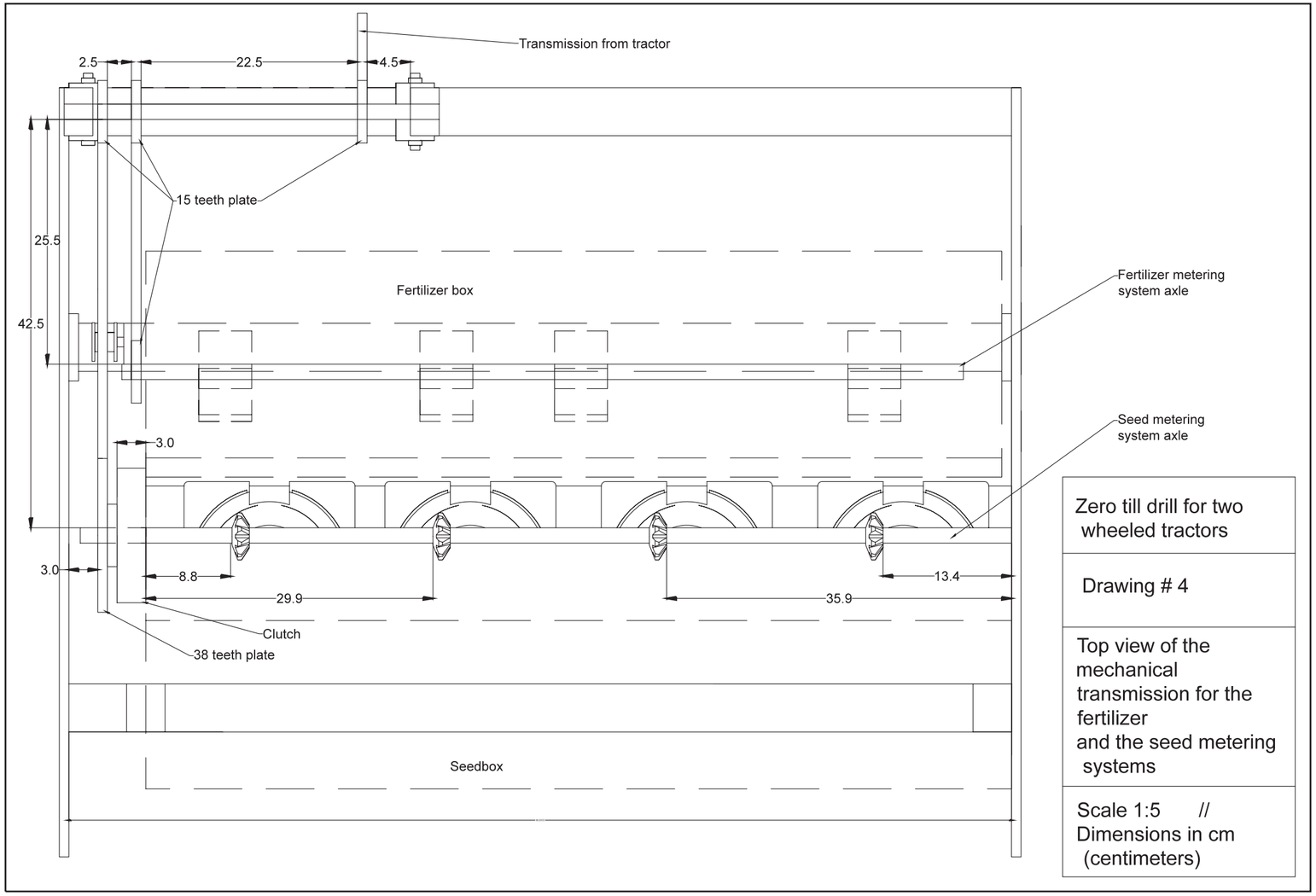
Transmission from tractor
2.5
22.5
4.5
15 teeth plate
25.5
42.5
Fertilizer box
Fertilizer metering system axle
Seed metering system axle
3.0
3.0
8.8
29.9
35.9
13.4
Clutch
38 teeth plate
Seedbox
Zero till drill for two wheeled tractors
Drawing # 4
Top view of the mechanical transmission for the fertilizer and the seed metering systems
Scale 1:5 //
Dimensions in cm (centimeters)

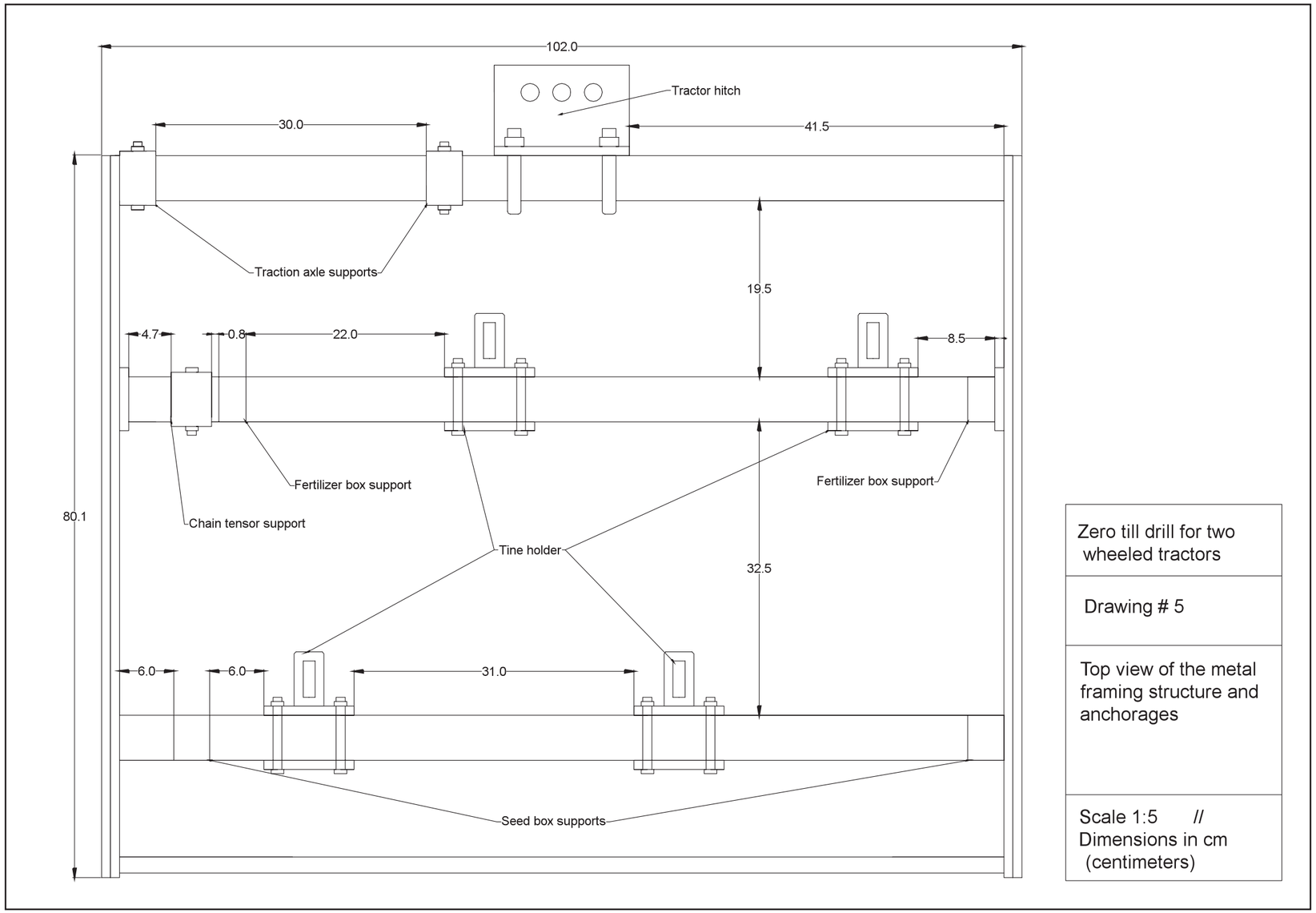
102.0
Tractor hitch
30.0
41.5
Traction axle supports
19.5
4.7
0.8
22.0
8.5
Fertilizer box support
Fertilizer box support
80.1
Chain tensor support
Tine holder
32.5
6.0
6.0
31.0
Seed box supports
Zero till drill for two wheeled tractors
Drawing # 5
Top view of the metal framing structure and anchorages
Scale 1:5 //
Dimensions in cm (centimeters)

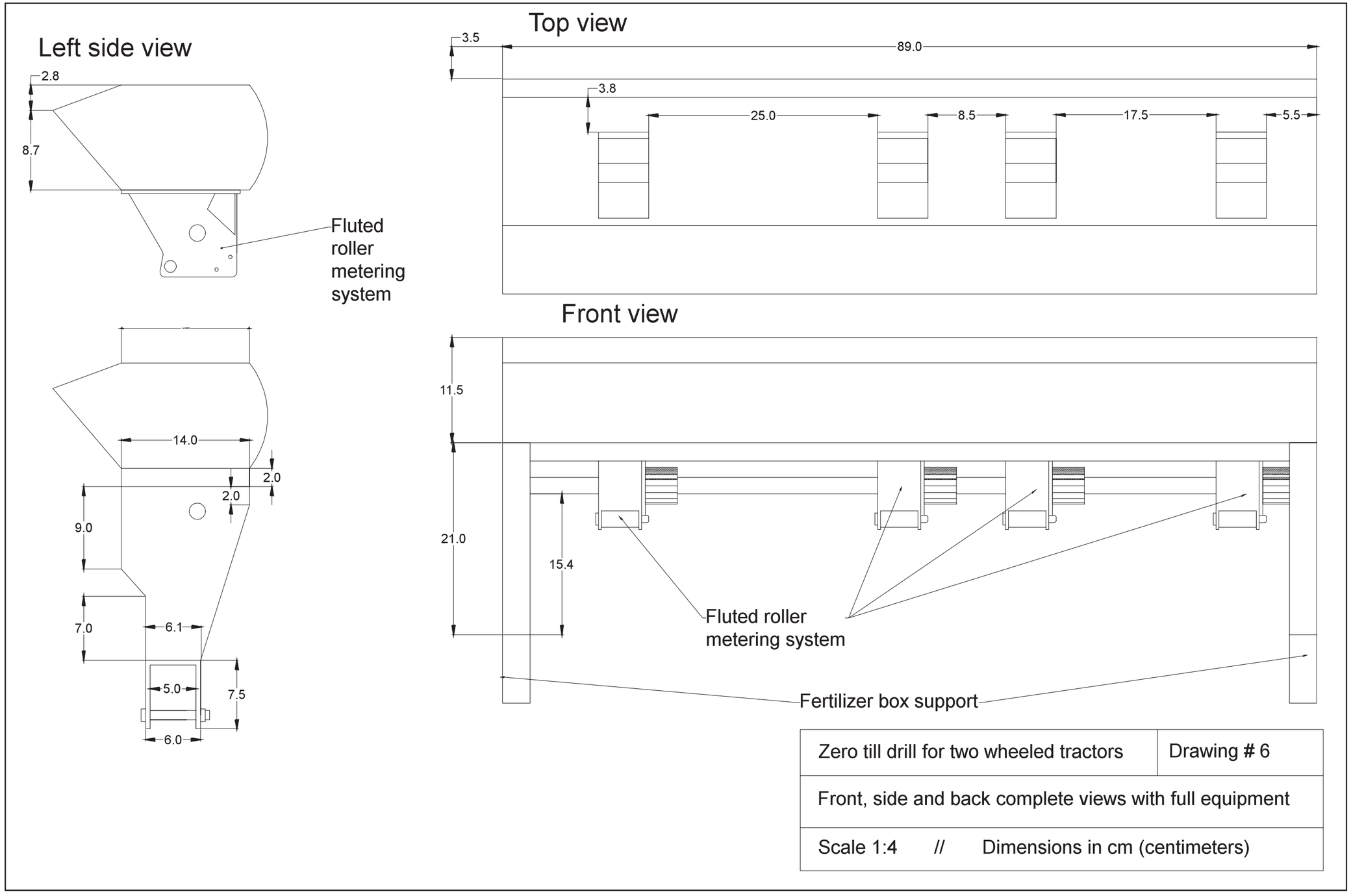
Left side view
2.8
8.7
Fluted roller metering system
Top view
3.5
89.0
3.8
25.0
8.5
17.5
5.5
Front view
11.5
21.0
15.4
Fluted roller metering system
Fertilizer box support
14.0
2.0
2.0
9.0
7.0
6.1
5.0
7.5
6.0
Zero till drill for two wheeled tractors
Drawing # 6
Front, side and back complete views with full equipment
Scale 1:4 // Dimensions in cm (centimeters)

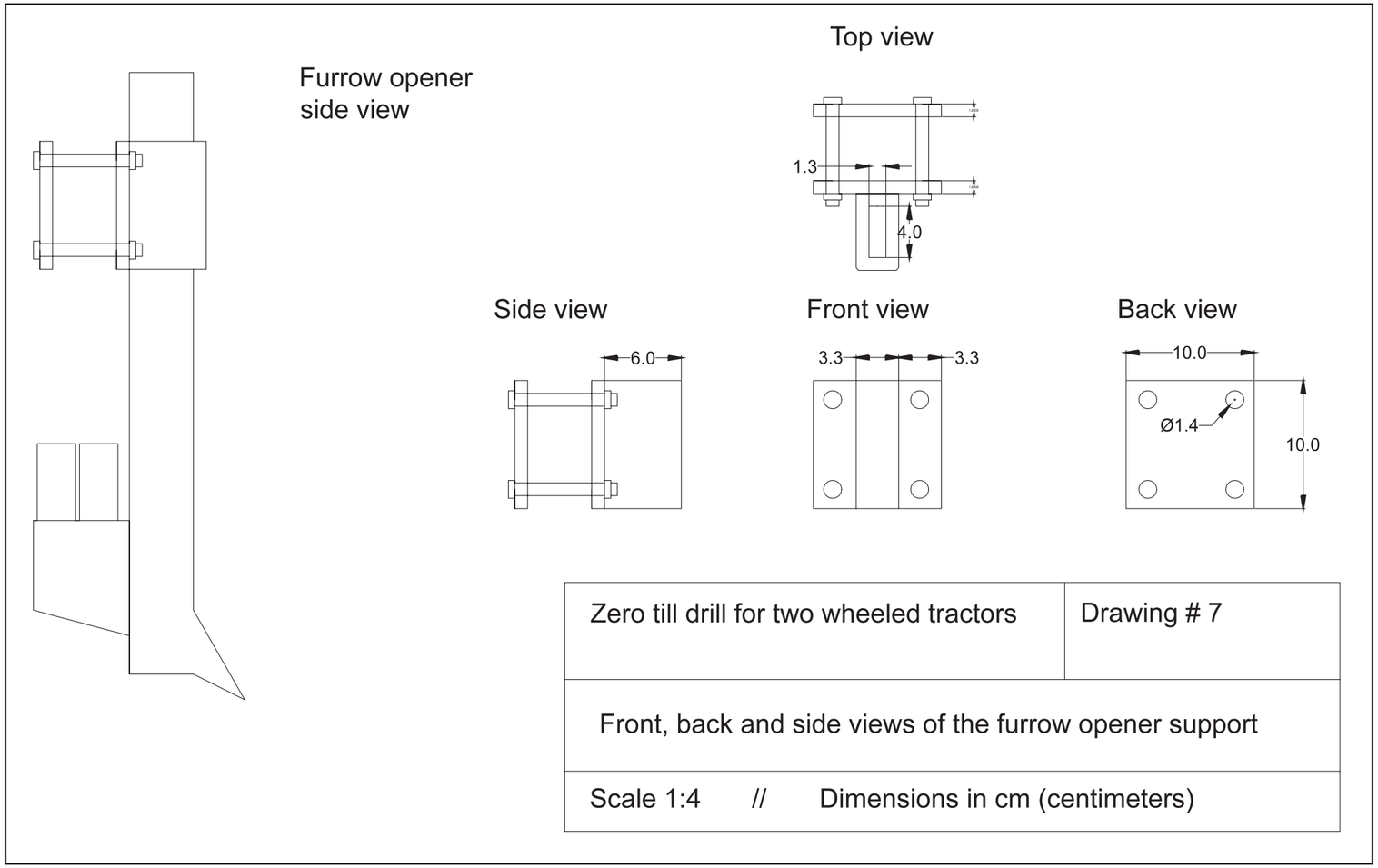
Furrow opener
side view
Top view
1.3
4.0
Side view
6.0
Front view
3.3
3.3
Back view
10.0
Ø1.4
10.0
Zero till drill for two wheeled tractors
Drawing # 7
Front, back and side views of the furrow opener support
Scale 1:4 // Dimensions in cm (centimeters)

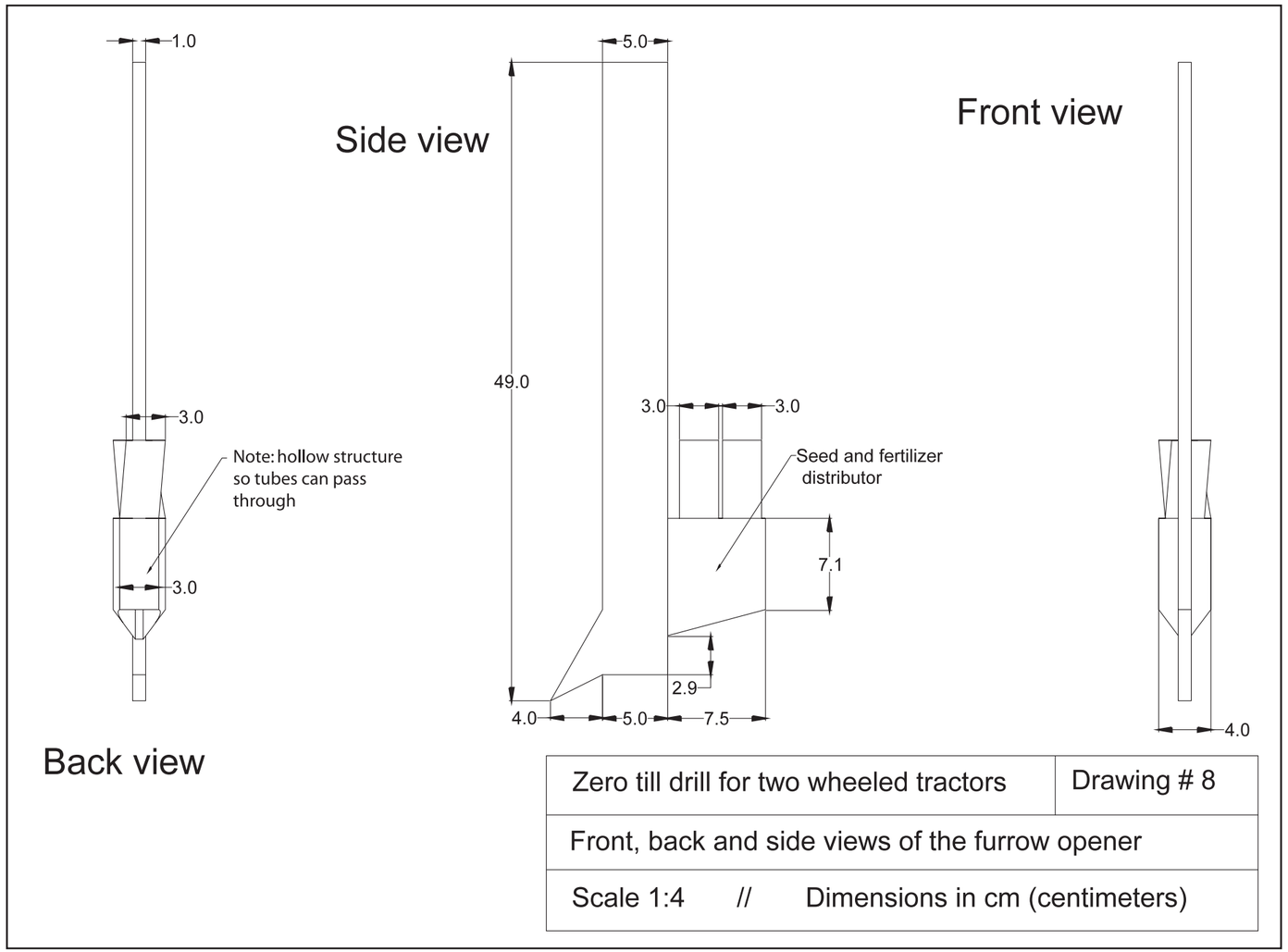
1.0
5.0
Side view
Front view
49.0
3.0
3.0
3.0
Note: hollow structure so tubes can pass through
Seed and fertilizer distributor
7.1
3.0
2.9
4.0
5.0
7.5
4.0
Back view
Zero till drill for two wheeled tractors
Drawing # 8
Front, back and side views of the furrow opener
Scale 1:4 // Dimensions in cm (centimeters)

Chain tensor

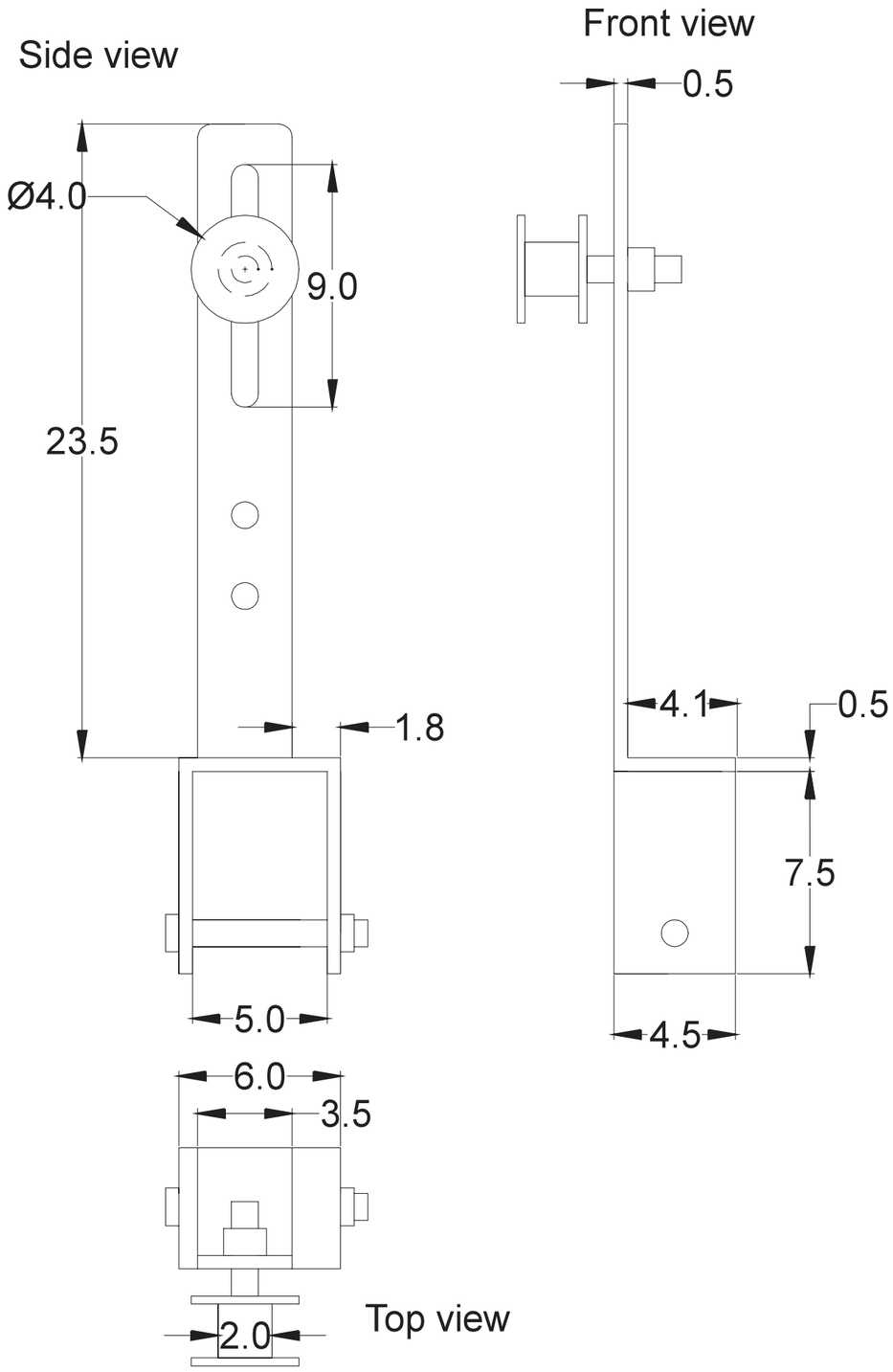

Traction axle support

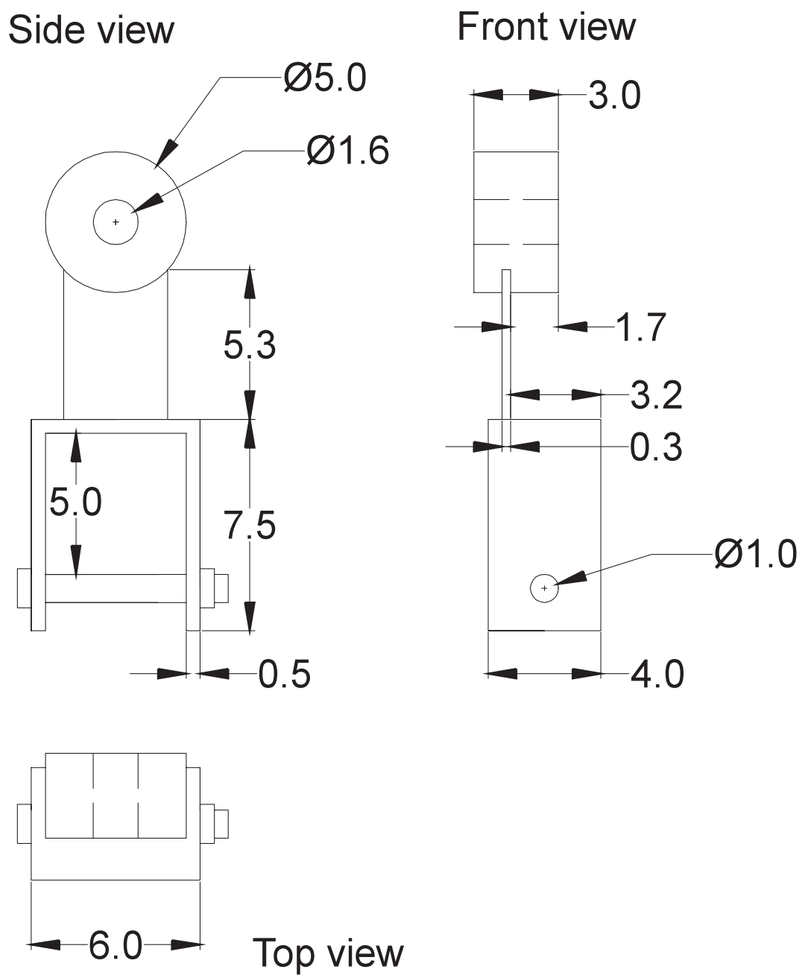

Zero till drill for two wheeled tractors	Drawing # 9
Chain tensor and traction axle support	
Scale 1:1 // Dimensions in cm (centimeters)	

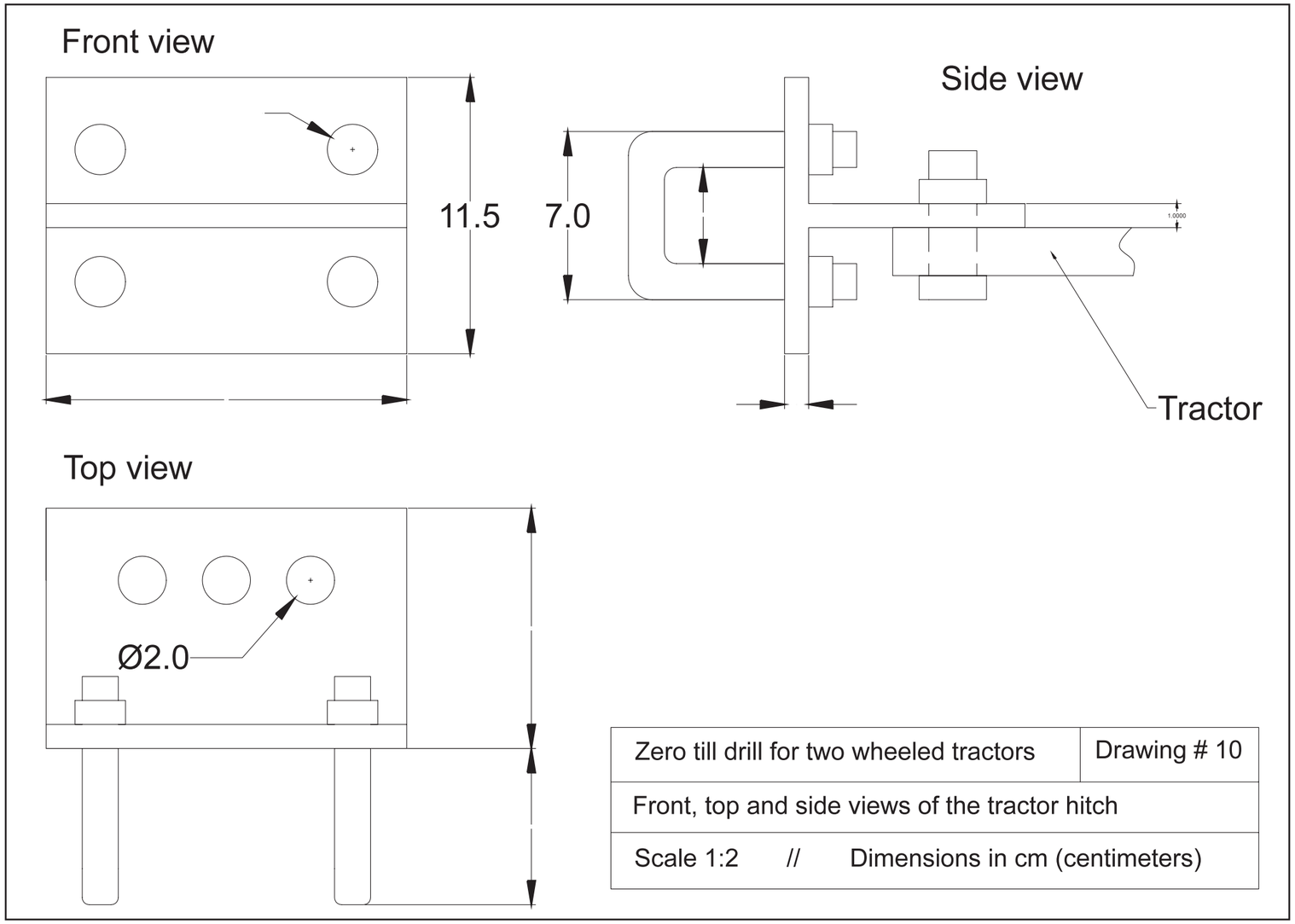
Front view
11.5
7.0
Side view
1.0000
Tractor
Top view
Ø2.0
Zero till drill for two wheeled tractors
Drawing # 10
Front, top and side views of the tractor hitch
Scale 1:2 // Dimensions in cm (centimeters)

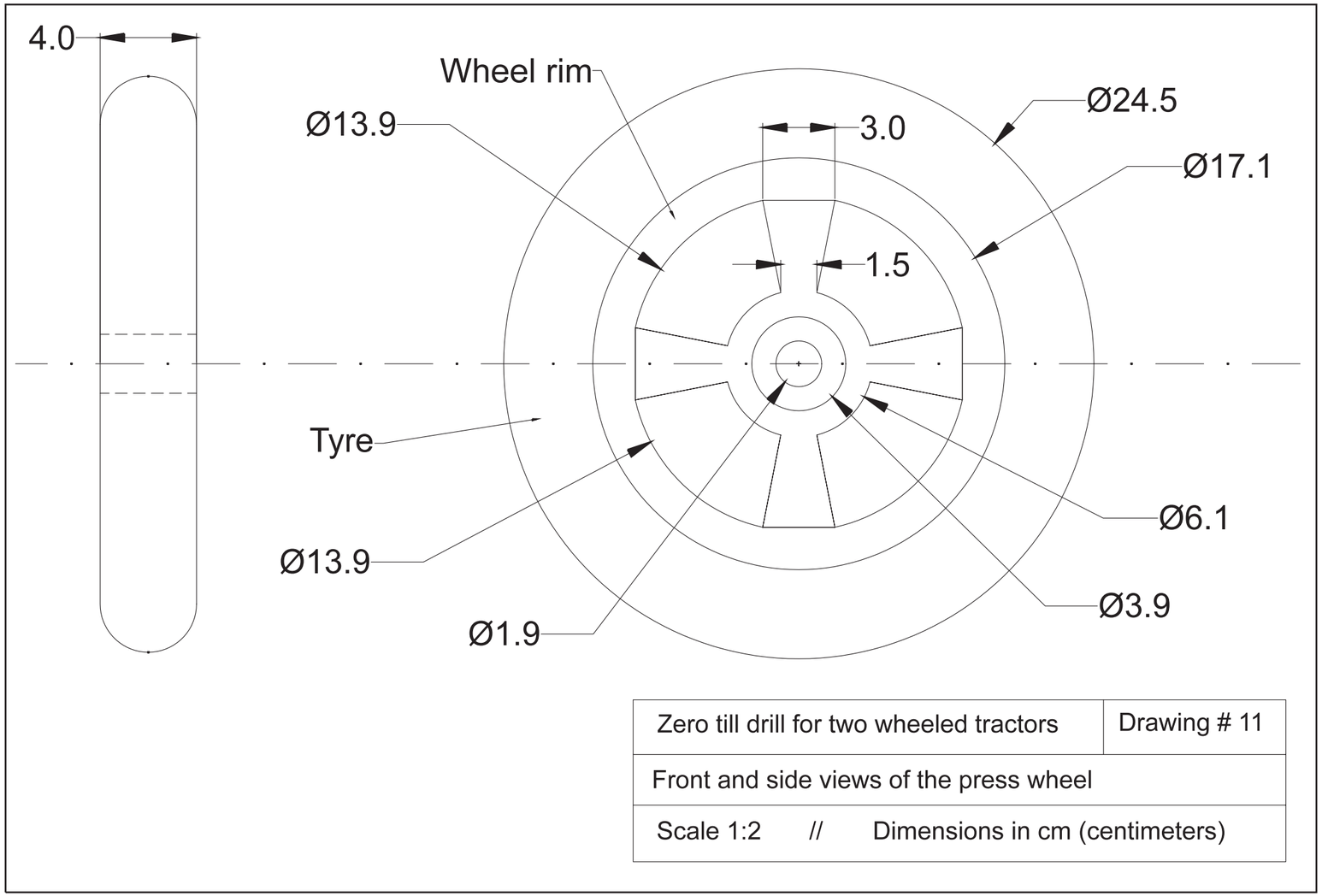
4.0
Wheel rim
Ø13.9
3.0
Ø24.5
Ø17.1
1.5
Tyre
Ø13.9
Ø6.1
Ø3.9
Ø1.9
Zero till drill for two wheeled tractors
Drawing # 11
Front and side views of the press wheel
Scale 1:2 // Dimensions in cm (centimeters)

Photo: Timothy J. Krupnik

CHAPTER

4

Bed planting options for two-wheeled tractors

Bed planting options for two-wheeled tractors

Bed planting is a long-practiced method of crop establishment based on the use of long, elevated beds upon which crops are seeded, frequently by a machine. These beds (sometimes called ridges or raised beds) alternate with furrows that are used for irrigation and for improved field access (Figure 1). Bed planting stands in contrast to crop establishment on flat field surfaces and is common in developed nations, often for horticulture. It is less frequently utilized for cereals, but interest in the practice is spreading in the tropics and temperate regions (Hobbs et al. 2008; Humphreys and Roth, 2006; Johansen et al. 2012; Wang et al. 2009).

Although the initial tillage operation to establish beds involves considerable soil disturbance, bed planting is commonly grouped under the heading of resource-conserving agriculture crop management practices. This is because the technique has considerable potential to save resources - a most notably irrigation water - and because once established, beds can be left in the field as permanent fixtures, with farmers practicing only seasonal reshaping of the beds and direct seeding of crops on their surfaces, and maintaining crop residues as they rotate between crops. Improvements in soil structure, water infiltration, increased soil nutrient availability and nitrogen recovery efficiency, and decreased salt concentrations, as well as lowered CO_2 emissions have been observed when beds are maintained permanently with residue retention, compared to when they are re-tilled and residues are incorporated from year to year (Devkota et al. 2013; Verachtert et al. 2009; Verhulst et al. 2011).

In Bangladesh and other tropical regions, farmers commonly use bed planting devices that can be attached to either four- or two-wheeled tractors (Hobbs et al. 2008; Hossain et al. 2004; Johansen et al. 2012). The latter is the subject of this book and chapter. When established with two-wheeled tractors, beds are typically 50-60 cm wide, with a total length of 75-90 cm from the base of one furrow to another (Johansen et al. 2012; Talukder et al. 2011). This permits farmers to establish two lines of wheat or a single line of maize or mungbean on the beds (Figure 2). Rice can also be transplanted or direct seeded on the beds in different configurations (Bouman et al. 2007). When established using four-wheel tractors, beds can be constructed with wider surfaces (see Govaerts et al. 2007), which is ideal for rainfed crops where precipitation can evenly wet the soil, because the wetting front resulting from irrigation applied by the furrow may not always reach the central rows of the planted crop, where beds are wide.

When making beds using a two-wheeled tractor, it is sometimes recommended to pre-till fields once or twice before establishing the bed, especially where soils are finely textured. This facilitates easier construction of the bed by the bed-planting machine (Figure 1), which may also require 1-2

Photo: CIMMYT

Figure 1. A bed planter powered by a two-wheeled tractor shaping a field with rice residues in northern Bangladesh.

Photo: Abdul Momin

Figure 2. In environments with high rainfall in the early season, bed planting (right) has been observed to shed excess water from the field, thereby avoiding water logging better than flat-planted fields (left). This is an area for future research.

subsequent passes for adequate bed formation, although in some areas with coarser textured soils, pre-tillage may not be necessary. Recently, the Wheat Research Center and Farm Machinery and Postharvest Engineering Division of BARI developed a rotary blade bed planter, which can form beds, seed and fertilize in soil that has not been pre-tilled.

Like the other machines in this volume, bed planters can till, form beds, seed and basally fertilize the crop at the same time. The functional parts of the bed planter include: (1) a toolbar frame; (2) furrow openers (the number of which can be adjusted depending on the crop planted and width of the bed); (3) a seed box with a metering unit, most commonly inclined, rotating plates, though cupped seeders and other types are also possible (Figure 3; see Chapter 9); (4) a fertilizer box that distributes basal fertilizer, usually with a fluted roller mechanism; (5) tillage blades; (6) power transmission elements (see Figure 4) including chains, sprockets, and other components (Hossain et al. 2004); and (7) the bed shaper that is dragged behind the tractor and rotating blades to form the trapezoidal shape of the bed (Figure 5). Bed planters are most commonly used with Dongfeng two-wheeled tractors, though new innovations developed in Bangladesh are now permitting their attachment to Sifeng tractors (Figures 6 and 7).

Where permanent beds are established, farmers or agricultural service providers can remove unnecessary blades, allowing them to strip-till (see Chapter 5) on top of the bed surface. Under these circumstances, farmers in Bangladesh frequently utilize the same bed shaper, although an attachment consisting of a pair of shovels dragged along the furrow to push soil back onto the beds is a recommended alternative. Some innovative machines have also been developed that allow farmers easily to switch between strip tillage on flat surfaces to bed planting implements on the same machine (Haque et al. 2011).

Farmers can channel irrigation water down the furrows between the beds for quicker and more efficient irrigation than in crops grown on flat field surfaces. In Bangladesh, irrigation savings of up to 31 percent have been observed where farmers grow rice on raised beds (Talukder et al. 2011),

Photo: Santiago Santos Valle

Figure 3. Top view of the seed and fertilizer boxes of the bed planter developed in Bangladesh.

Photo: Santiago Santos Valle

Figure 4. Detail of the incline plate transmission of a bed planter.

which could provide economic and environmental advantages where irrigation is expensive or ground water supplies are dwindling. In areas with ground water contaminated by arsenic, as in parts of south-central and southwestern Bangladesh, growing rice on freshly constructed raised beds significantly reduced the amount of arsenic deposited on the soil surface through irrigation and, thereby, the crop's arsenic uptake and contamination (Talukder et al. 2011). High arsenic accumulation can adversely affect rice yield. Duxbury et al. (2007) demonstrated that yield increased on raised beds relative to flat planting in areas with increasingly high arsenic concentration in the soil. These findings have important implications for both agricultural productivity and human health. Other commonly cited benefits of bed planting include increased ease of field access, particularly for weeding and other intercultural operations. Farmers frequently comment that bed-planted wheat has reduced rodent damage, but this has yet to be scientifically verified.

Some researchers have reported drawbacks and tradeoffs associated with the use of raised beds. Working in southern Bangladesh, Rawson et al. (2007) observed reduced yields when wheat was grown on raised beds relative to other machine-based tillage and planting practices, though their data were not supported by probability statistics. Sub-optimal performance may be explained by the poor construction and subsequent collapse of the beds, particularly where soils were light and heavy irrigation is applied. Despite this constraint, Rawson et al. (2007) reported that farmers were optimistic about the use of raised beds for wheat, an observation recently confirmed by Uddin et al. (2013), who observed a 14 percent increase in grain yield relative to conventional planting. In the Punjab, Singh et al. (2009) reported poor rice-wheat system yield performance when rice was both transplanted and direct seeded on beds, a result of root knot nematode infestation on sandy loam soils where continuous flood irrigation was not applied. As such, bed planting should not be treated as a panacea for all environments - farmers, researchers, and extension agents should experiment with and adapt the technique to assess its performance before broad-scale recommendations for adoption are made.

Photo: Santiago Santos Valle

Figure 5. Rear view of the bed planter. Note the bed shaper, which will form beds in a trapezoidal configuration with a 50 cm wide bed surface and a 75 cm furrow-to-furrow width.

Photo: Santiago Santos Valle

Figure 6. Detail of the bed planter attached to a Dongfeng two-wheeled tractor.

Photo: Israil Hossain

Figure 7. A bed planter that has been modified to attach to a Sifeng two-wheeled tractor. Sifeng tractors typically have higher rotary blade speeds than Dongfeng tractors and are attractive to farmers who have heavier soils, as in much of southern Bangladesh. Note the innovative way in which the power transmission has been attached to the tractor wheel hub, enabling the merging of the planter to the tractor.

References

Bouman, B. A. M., Humphreys, E., Tuong, T. P., Barker, R. 2007. Rice and Water. Advances in Agronomy. 96:187-237.

Devkota, M., Martius, C., Lamers, J. P. A., Sayre, K. D., Devkota, K. P., Vlek, P. L. G. 2013. Tillage and nitrogen fertilization effects on yield and nitrogen use efficiency of irrigated cotton. Soil and Tillage Research. 134:72-82.

Duxbury, J. M., Panaullah, G., Koo-Oshima, S. 2007. Remediation of arsenic for agriculture sustainability, food security and health in Bangladesh, In: FAO (Ed.). Food and Agriculture Organization of the United Nations, Rome, p. 30.

Govaerts, B., Sayre, K. D., Lichter, K., Dendooven, L., Deckers, J. 2007. Influence of permanent raised bed planting and residue management on physical and chemical soil quality in rain fed maize/wheat systems. Plant and Soil. 291:39-54.

Haque, M., Bell, R., Islam, I., Sayre, K., Hossain, M. 2011. Versatile multi-crop planter for two-wheel Tractors : An innovative option for smallholders, 5th World Congress of Conservation Agriculture incorporating 3rd Farming Systems Design Conference, Brisbane, Australia, pp. 4-6.

Hobbs, P. R., Sayre, K., Gupta, R. 2008. The role of conservation agriculture in sustainable agriculture. Philosophical Transactions of the Royal Society-B. 363: 543-555.

Hossain, M. I., Sufian, M. A., Sarker, M. A. Z., Haque, E., Rahman, A. B. M. M. 2004. Power tiller operated bed planter for improved crop establishment. Journal of Science and Technology. 2:17-23.

Humphreys, E., Roth, C. H. 2006. Permanent beds and rice-residue management for rice-wheat systems in the Indo-Gangetic Plain, in: Humphreys, E., Roth, C. H. (Eds.), Permanent beds and rice-residue management for rice-wheat systems in the Indo-Gangetic Plain. Australian Centre for International Agricultural Research, Ludhiana, India. P. 193.

Johansen, C., Haque, M. E., Bell, R. W., Thierfelder, C., Esdaile, R. J. 2012. Conservation agriculture for small holder rainfed farming: Opportunities and constraints of new mechanized seeding systems. Field Crops Research. 132: 18-32.

Rawson, H. M., Gomez-Macpherson, H., Hissain, A. B. S, Saifulzzaman, M., Rashid, H., Sufian, M. A., Samad, M. A., Sarker, A. Z., Ahmed, F., Talukder, Z. I., Rahman, M., Siddique, M. M. A. B., Hossain, I., Amin, M. 2007. Onfarm wheat trials in Bangladesh: A study to reduce perceived constratints to yield in traditional wheat areas and southern lands that remain fallow during the dry season. Experimental Agriculture. 43: 21-40.

Singh, Y., Humphreys, E., Kukal, S.S., Singh, B., Kaur, A., Thaman, S., Prashar, A., Yadav, S., Timsina, J., Dhillon, S. S., Kaur, N., Smith, D. J., Gajri, P. R. 2009. Crop performance in permanent raised bed rice-wheat cropping system in Punjab, India. Field Crops Research. 110: 1-20.

Talukder, A. S. M. H. M., Meisner, C. A., Sarkar, M. A. R., Islam, M. S. 2011. Effect of water management, tillage options and phosphorus status on arsenic uptake in rice. Ecotoxicology and Environmental Safety. 74: 834-839.

Uddin, M. M., Haque, M. F., Akter, M. A., Hasan, M. Z., Tiwari, T. P., Krupnik, T.J. 2013. Performance of wheat varieties under different tillage systems in Faridpur. 12th Annual Bangladesh Society of Agronomy Conference. Gazipur, Bangladesh.

Verachtert, E., Govaerts, B., Lichter, K., Sayre, K. D., Ceballos-Ramirez, J. M., Luna-Guido, M. L., Deckers, J., Dendooven, L. 2009. Short term changes in dynamics of C and N in soil when crops are cultivated on permanent raised beds. Plant and Soil. 320:281-293.

Verhulst, N., Carrillo-Garcia, A., Moeller, C., Trethowan, R., Sayre, K. D., Govaerts, B. 2011. Conservation agriculture for wheat-based cropping systems under gravity irrigation: Increasing resilience through improved soil quality. Plant and Soil. 340. 467-479.

Wang, F. H., He, Z. H., Sayre, K., Li, S. D., Si, J. S., Feng, B., Kong, L. G. 2009. Wheat cropping systems and technologies in China. Field Crops Research. 111:181-188.

Photo: Santiago Santos Valle

Figure 8. Major components of a bed planter: **1.** chain tensor; **2.** fertilizer box with fluted roller metering system; **3.** seed box with inclined plate metering system **4.** cover for rotovator; **5.** tillage blades; **6.** bed shaper wheel; **7.** furrow opening system.

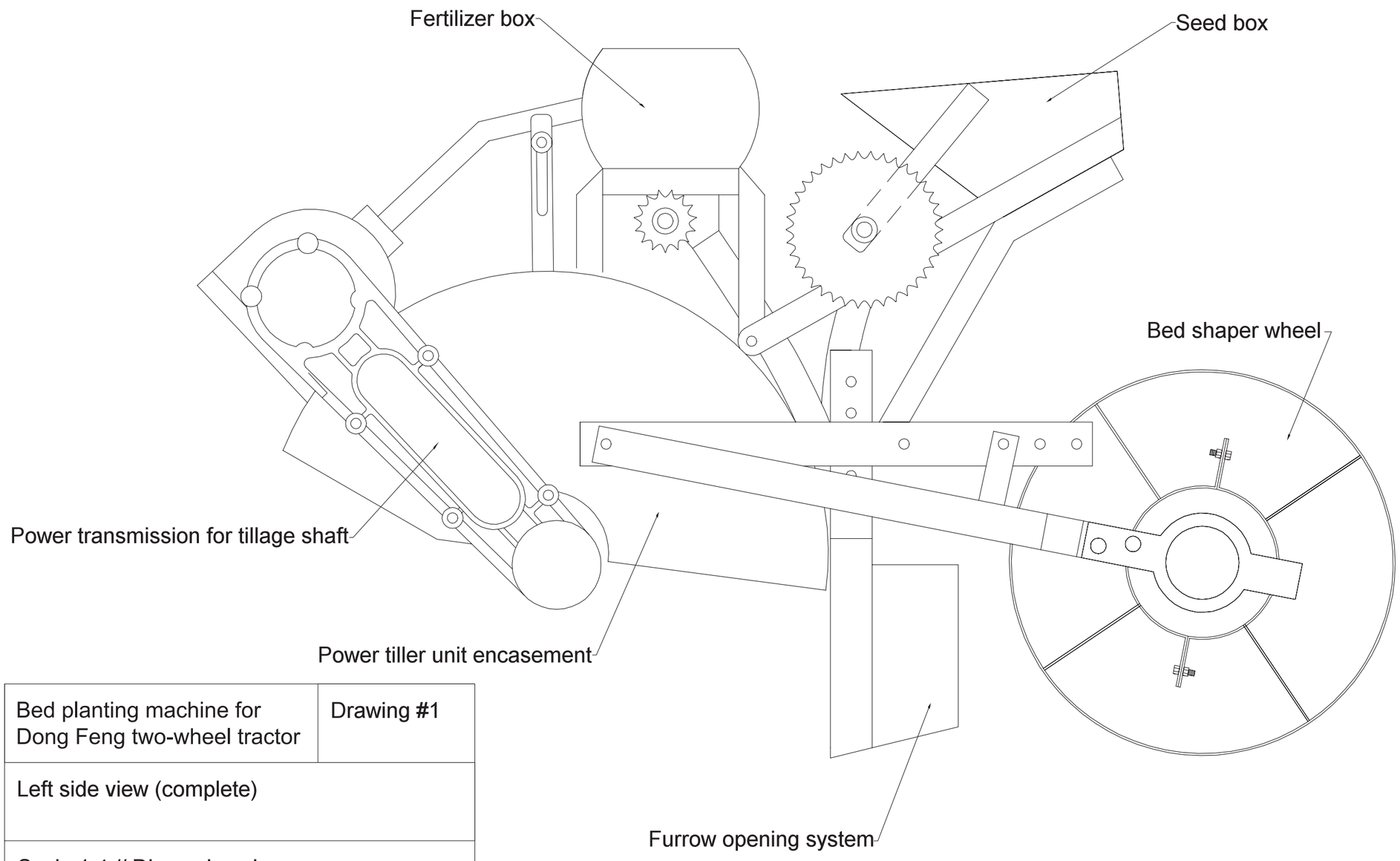

Bed planting machine for Dong Feng two-wheel tractor	Drawing #1
Left side view (complete)	
Scale 1:4 // Dimensions in cm	

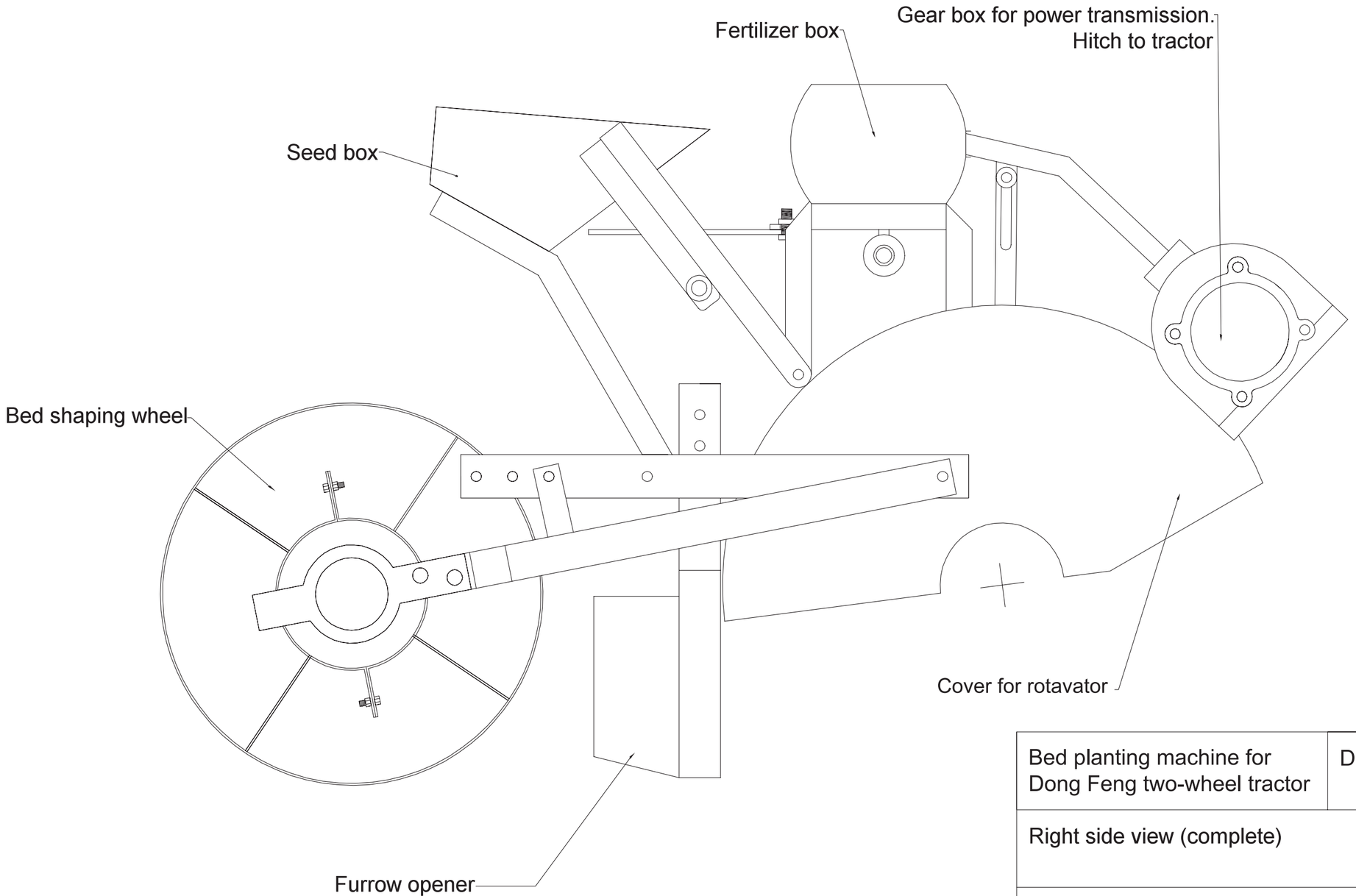

Bed planting machine for Dong Feng two-wheel tractor	Drawing #2
Right side view (complete)	
Scale 1:4 // Dimensions in cm	

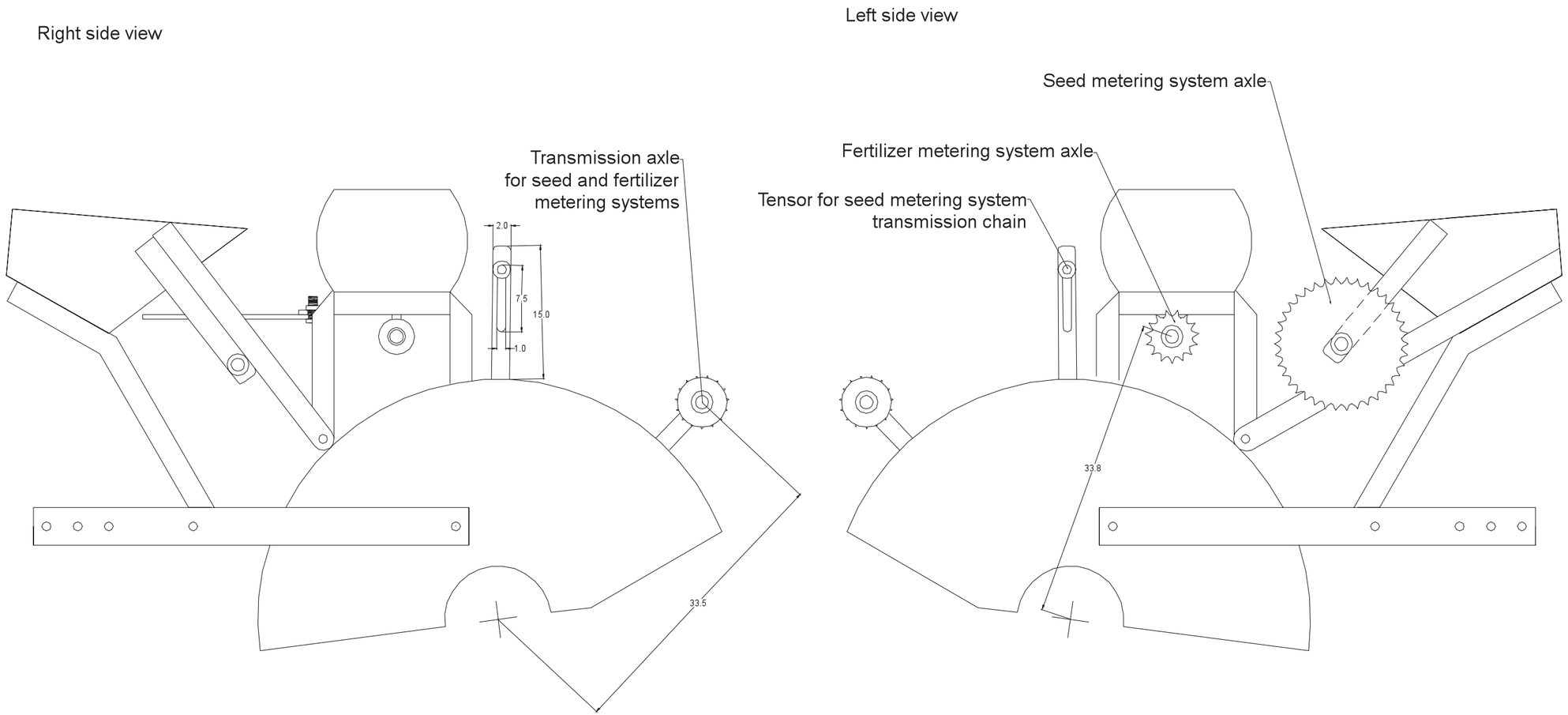

Bed planting machine for Dong Feng two-wheel tractor	Drawing #3
Side views of seed metering systems	
Scale 1:5 // Dimensions in cm	

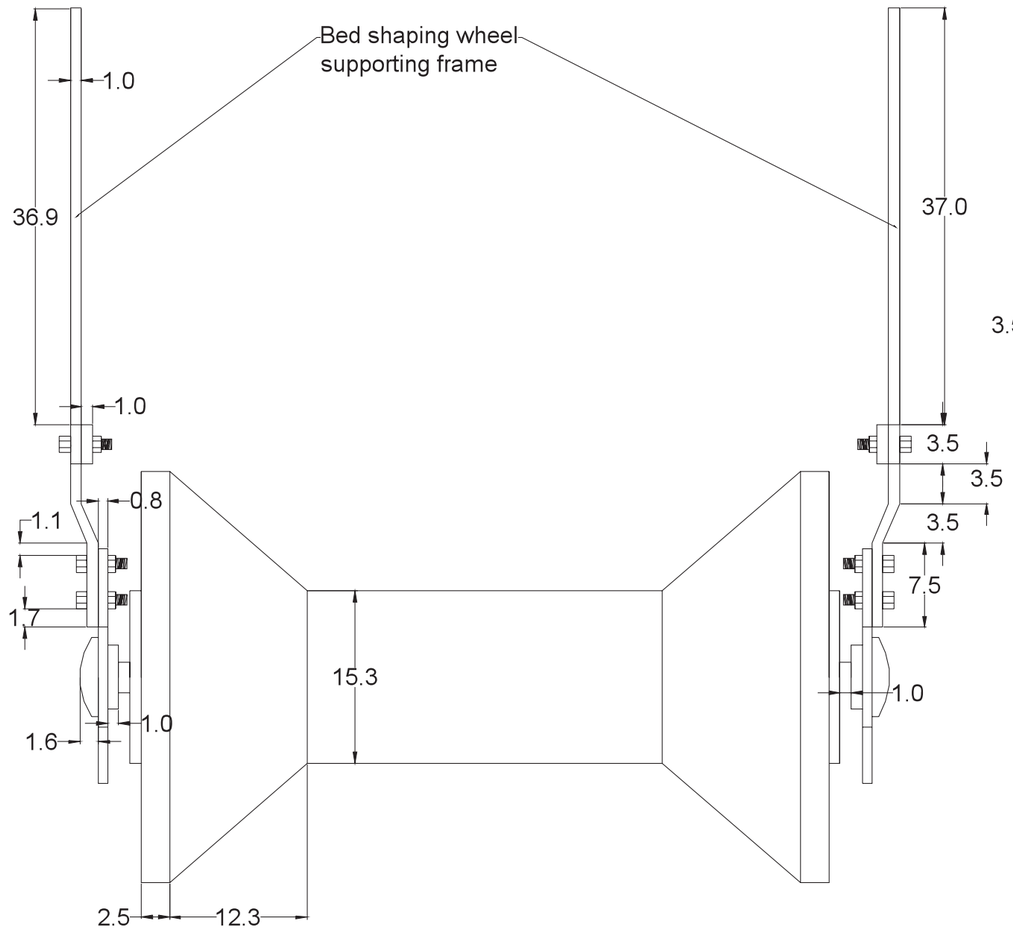

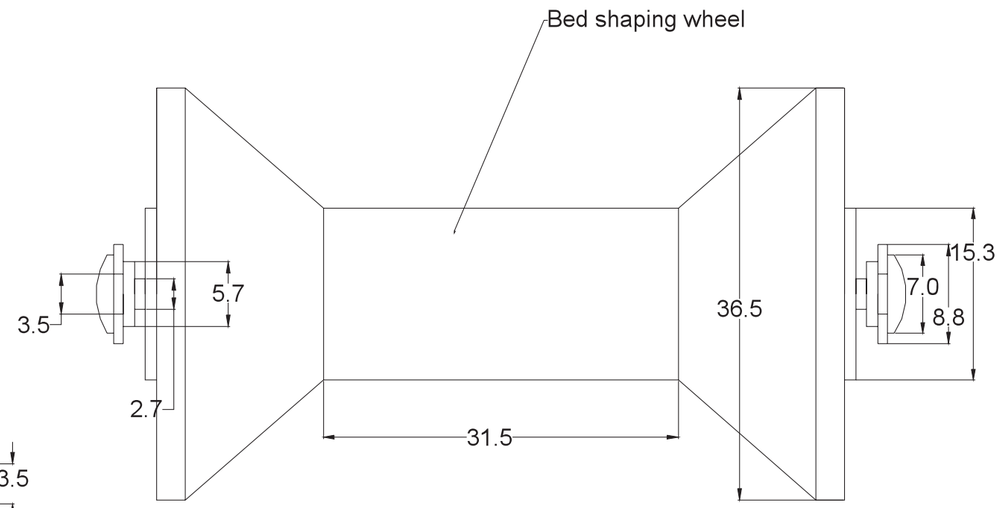

Bed planting machine for Dong Feng two-wheel tractor	Drawing #4
Bed shaping wheel and its frame top views	
Scale 1:5 // Dimensions in cm	

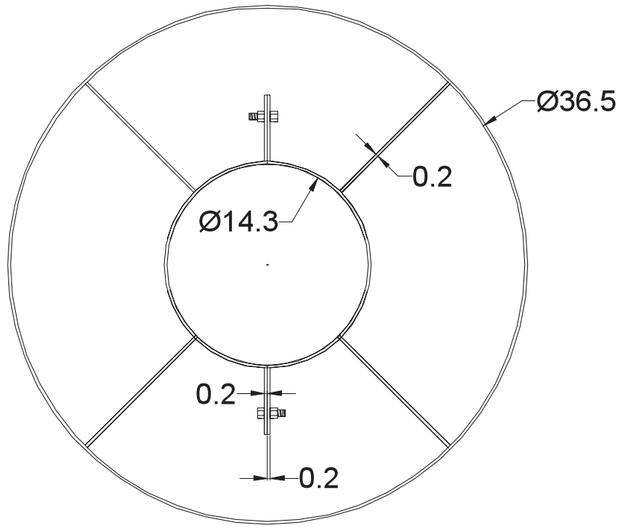

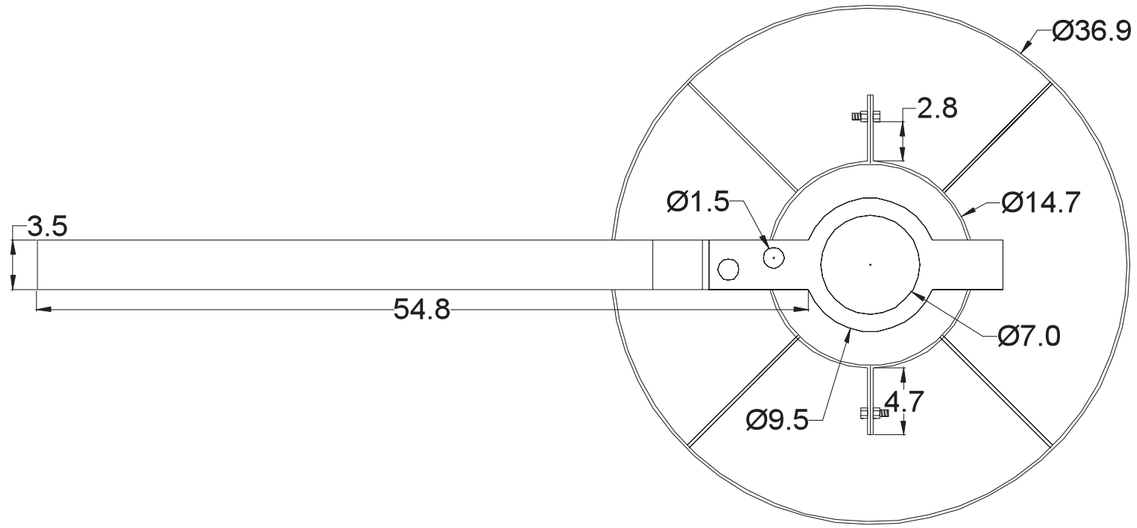

Bed shaping wheel hitch
to support frame

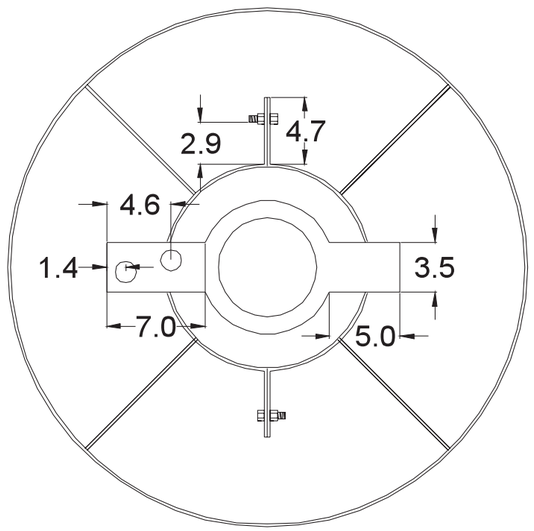

Bed planting machine for Dong Feng two-wheel tractor	Drawing #5
Bed shaping wheel and its frame top views	
Scale 1:4 // Dimensions in cm	

Cover for rotovator perspective view

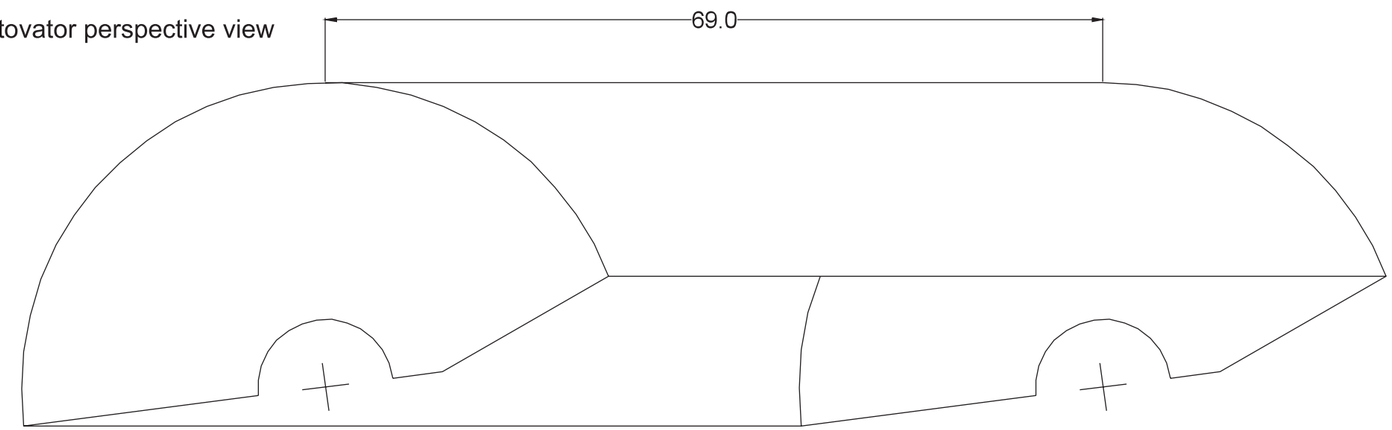

Cover for rotovator right side view

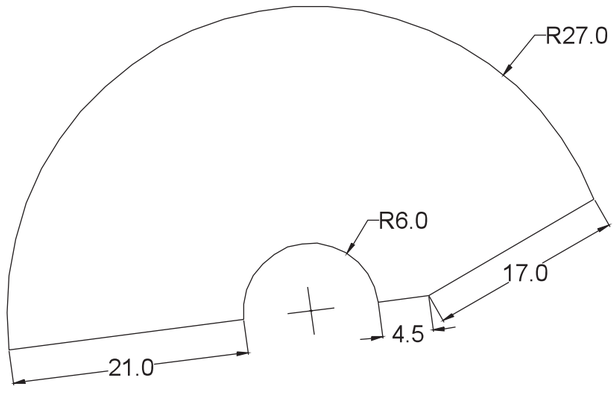

Cover for rotovator left side view

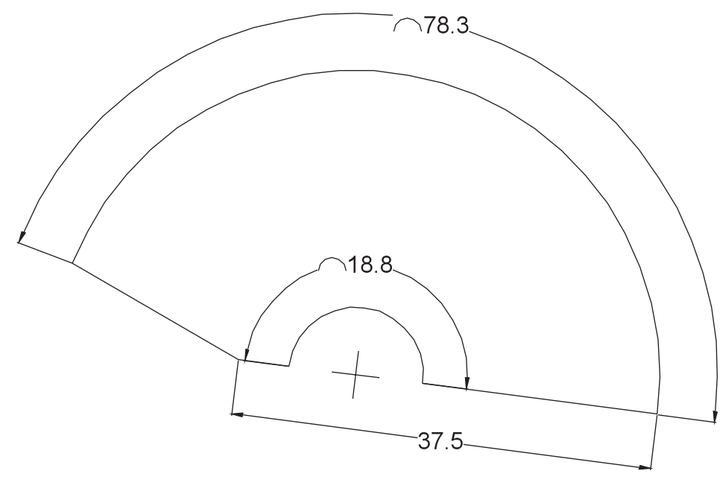

Bed planting machine for Dong Feng two-wheel tractor	Drawing #6
Cover for rotovator side and perspective views	
Scale 1:5 // Dimensions in cm	

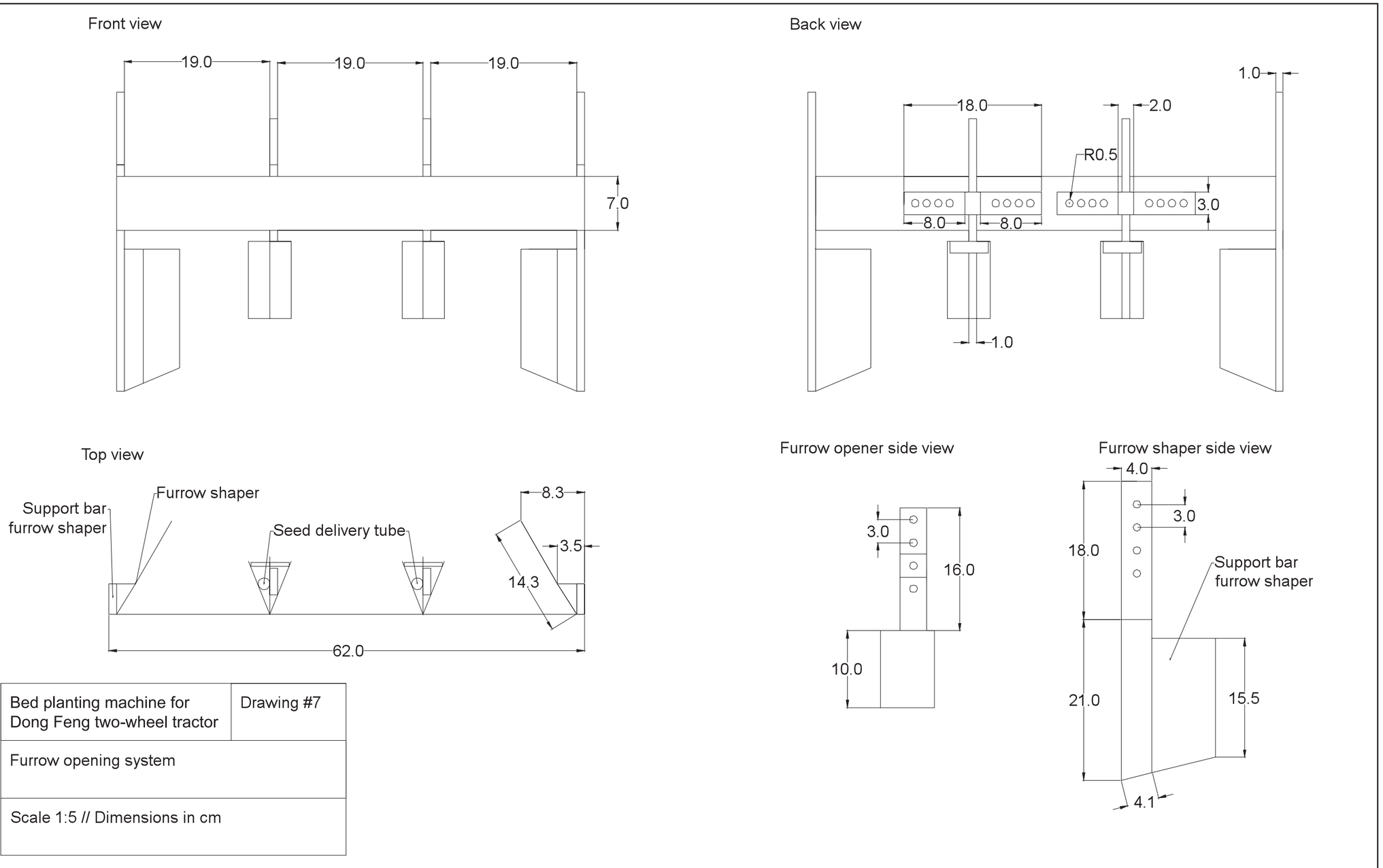
Front view
19.0
19.0
19.0
7.0
Back view
18.0
2.0
1.0
R0.5
3.0
8.0
8.0
1.0
Top view
Support bar
furrow shaper
Furrow shaper
Seed delivery tube
8.3
3.5
14.3
62.0
Furrow opener side view
3.0
16.0
10.0
Furrow shaper side view
4.0
3.0
18.0
Support bar
furrow shaper
21.0
15.5
4.1
Bed planting machine for
Dong Feng two-wheel tractor
Drawing #7
Furrow opening system
Scale 1:5 // Dimensions in cm

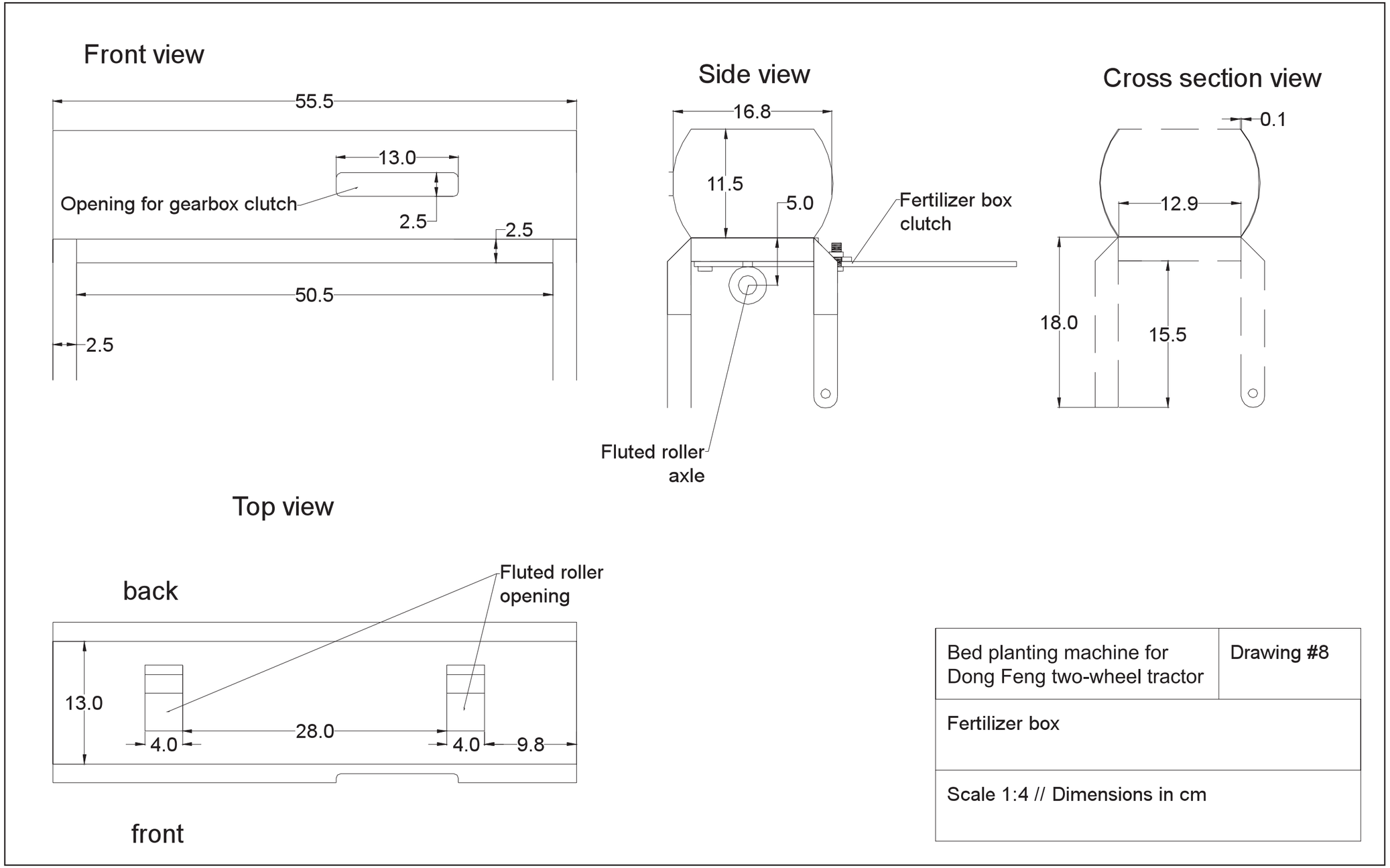
Front view
55.5
13.0
Opening for gearbox clutch
2.5
2.5
50.5
2.5
Side view
16.8
11.5
5.0
Fertilizer box clutch
Fluted roller axle
Cross section view
0.1
12.9
18.0
15.5
Top view
back
Fluted roller opening
13.0
4.0
28.0
4.0
9.8
front
Bed planting machine for Dong Feng two-wheel tractor
Drawing #8
Fertilizer box
Scale 1:4 // Dimensions in cm

Top view of transmission

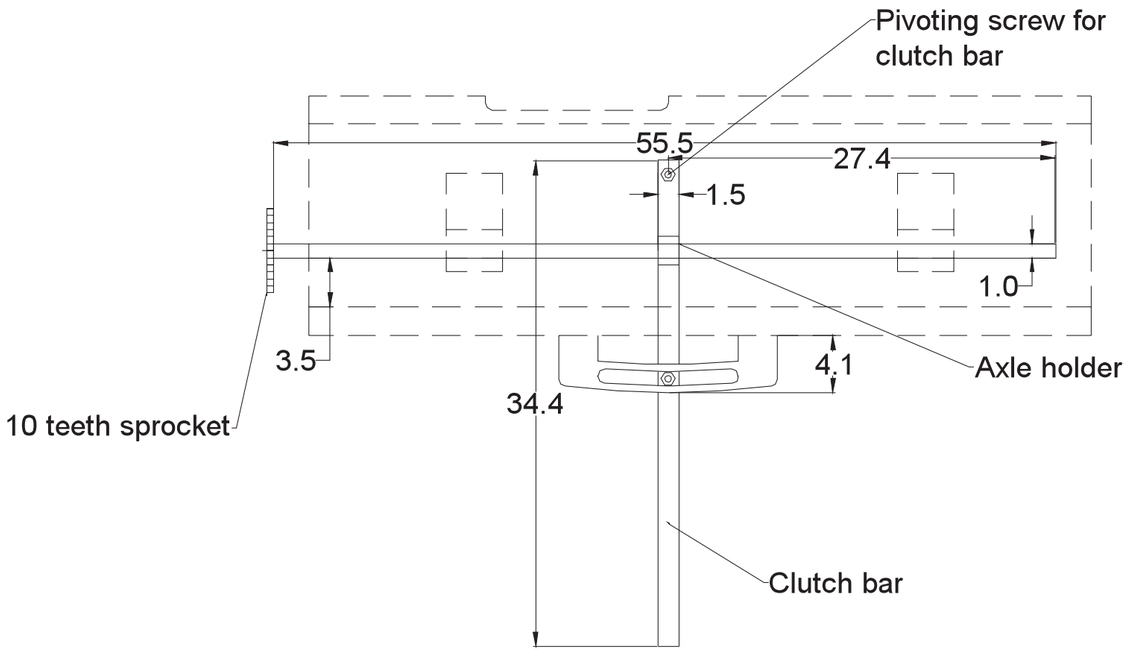

Detail of clutch bar and pivot structure

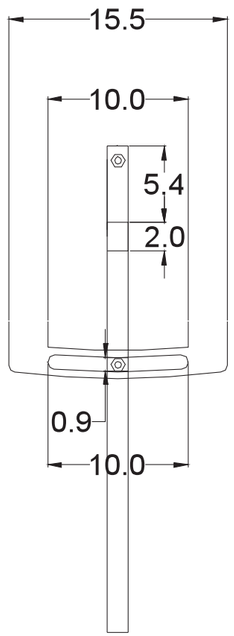

Side view of clutch bar axle holder

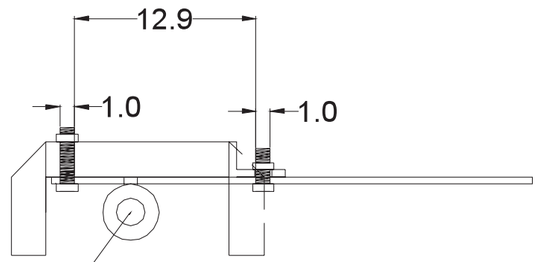

Diplaceable axle holder
It is attached to axle and clutch bar

Bed planting machine for Dong Feng two-wheel tractor	Drawing #9
Fertilizer metering system transmission and clutch	
Scale 1:4 // Dimensions in cm	

Front view

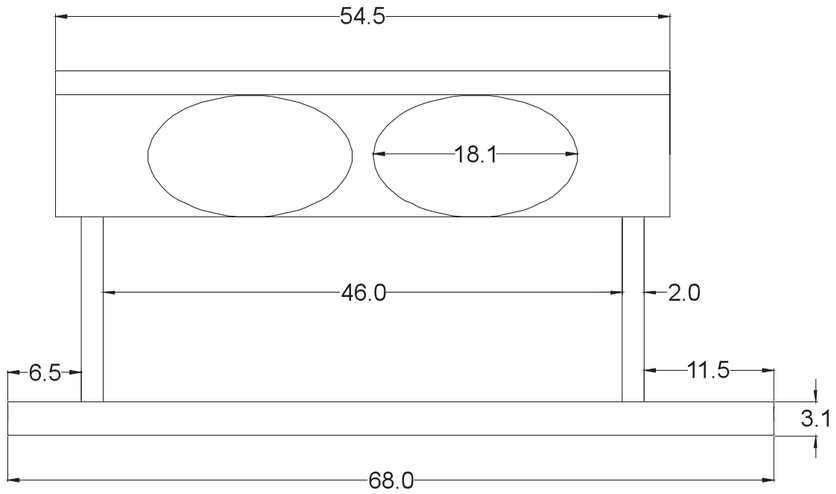

Top view

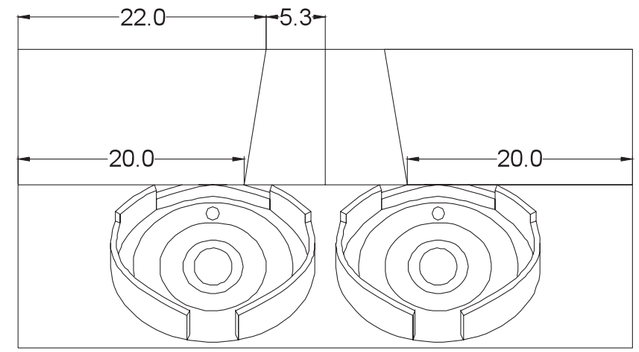

Side view of seed box with supports

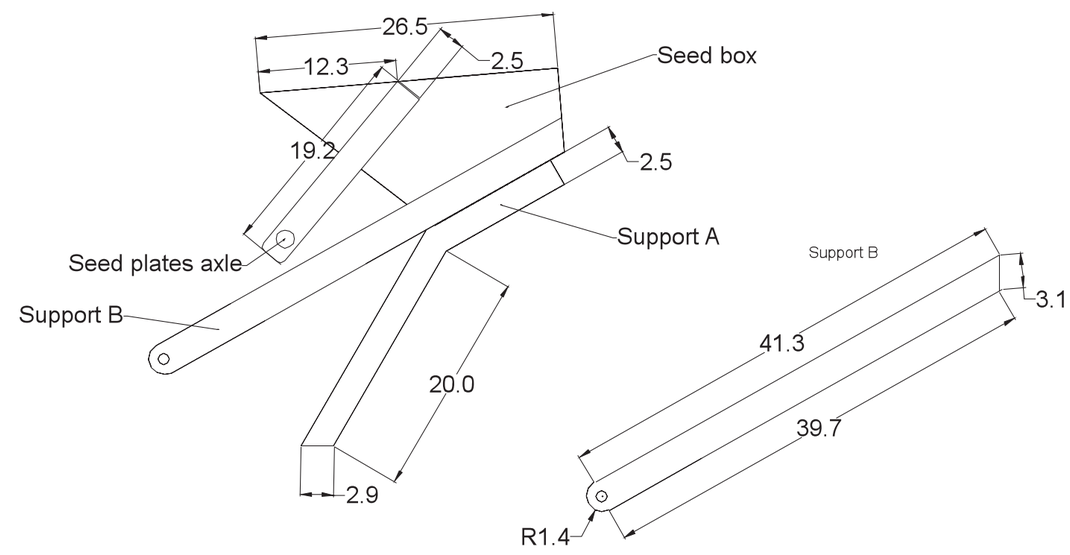

Back view

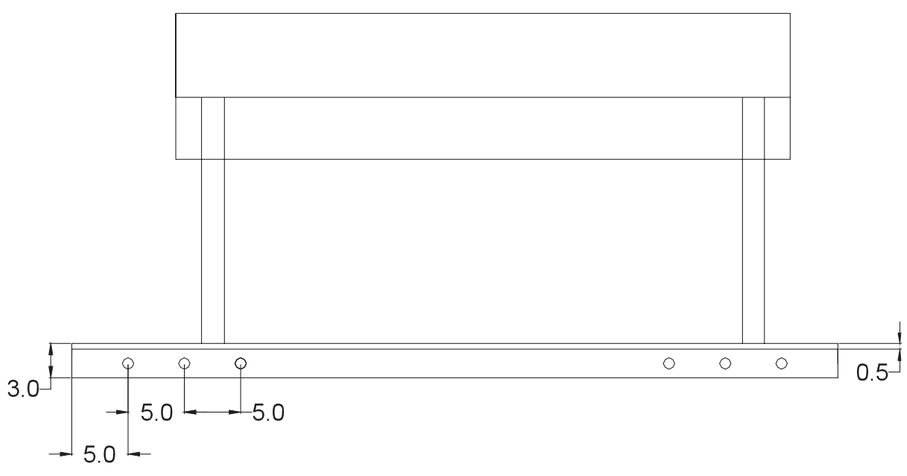

Seed box section with incline plate

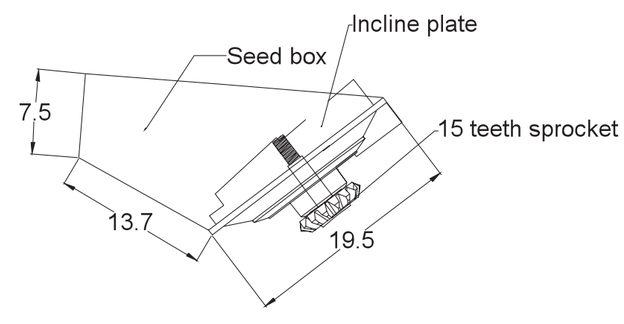

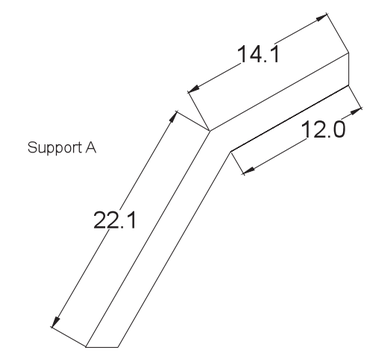

Bed planting machine for Dong Feng two-wheel tractor	Drawing #10
Seed box and support structure	
Scale 1:5 // Dimensions in cm	

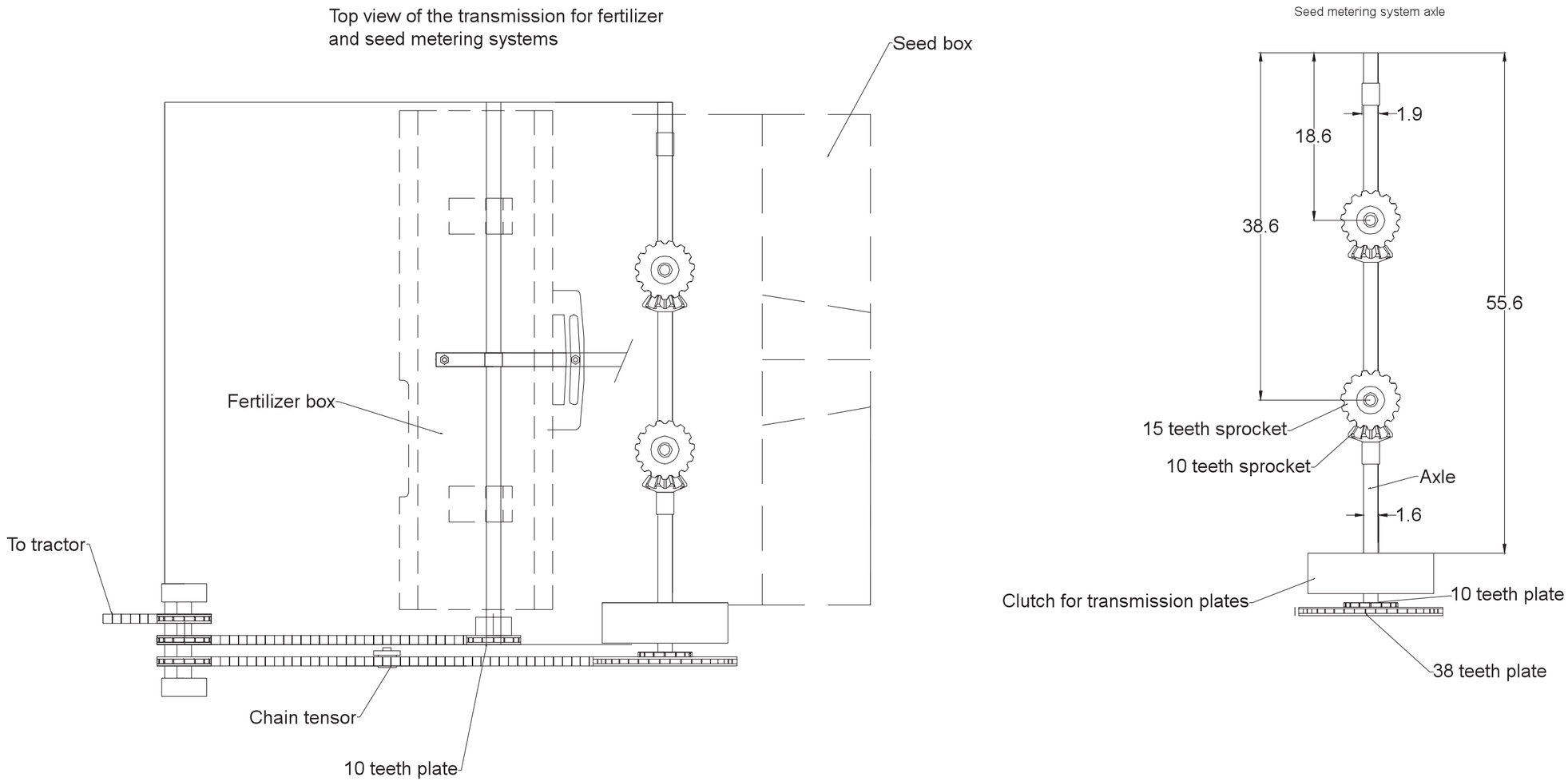

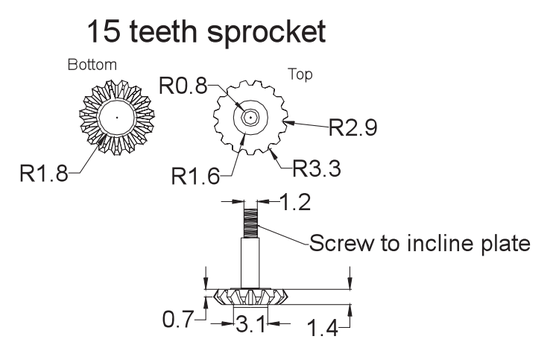

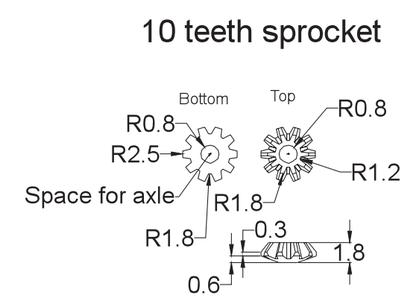

Bed planting machine for Dong Feng two-wheel tractor	Drawing #11
Transmission systems for fertilizer and seed metering systems	
Scale 1:5 // Dimensions in cm	

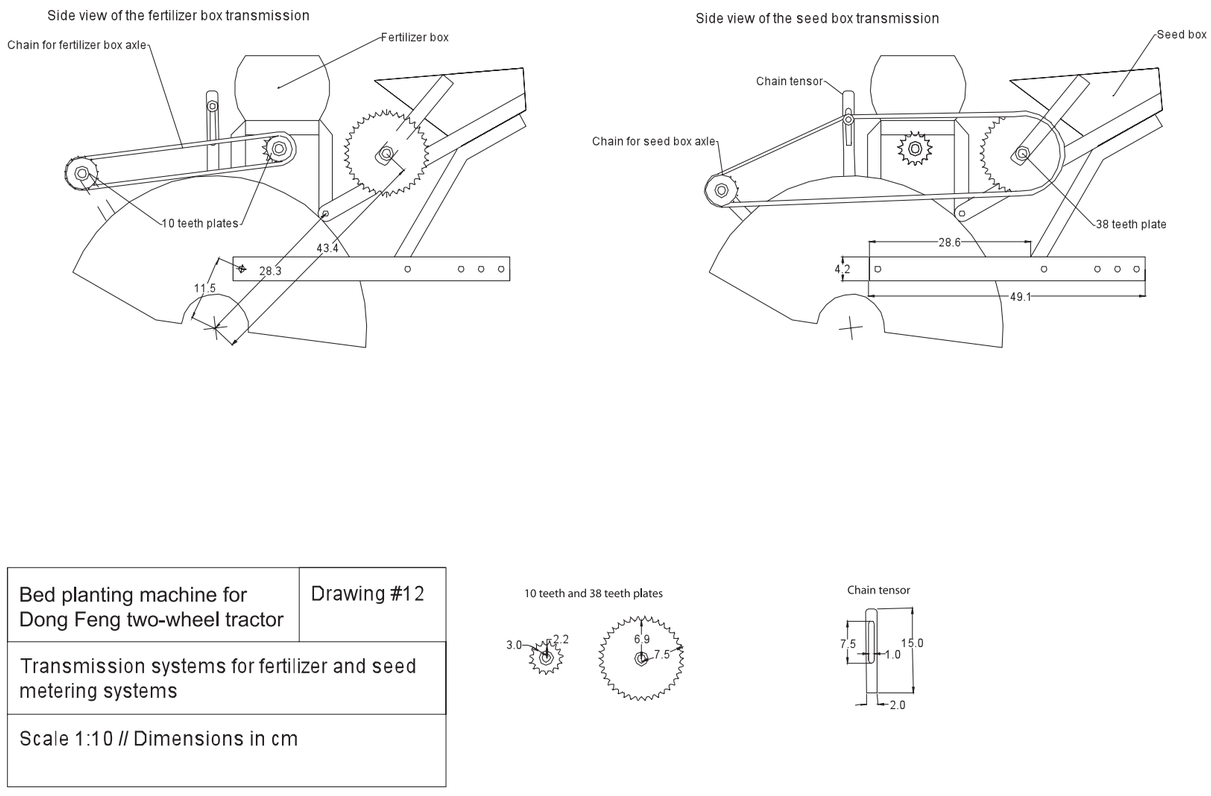
Side view of the fertilizer box transmission
Chain for fertilizer box axle
Fertilizer box
10 teeth plates
43.4
28.3
11.5
Side view of the seed box transmission
Seed box
Chain tensor
Chain for seed box axle
38 teeth plate
28.6
4.2
49.1
Bed planting machine for Dong Feng two-wheel tractor
Drawing #12
Transmission systems for fertilizer and seed metering systems
Scale 1:10 // Dimensions in cm
10 teeth and 38 teeth plates
3.0
2.2
6.9
7.5
Chain tensor
7.5
15.0
1.0
2.0

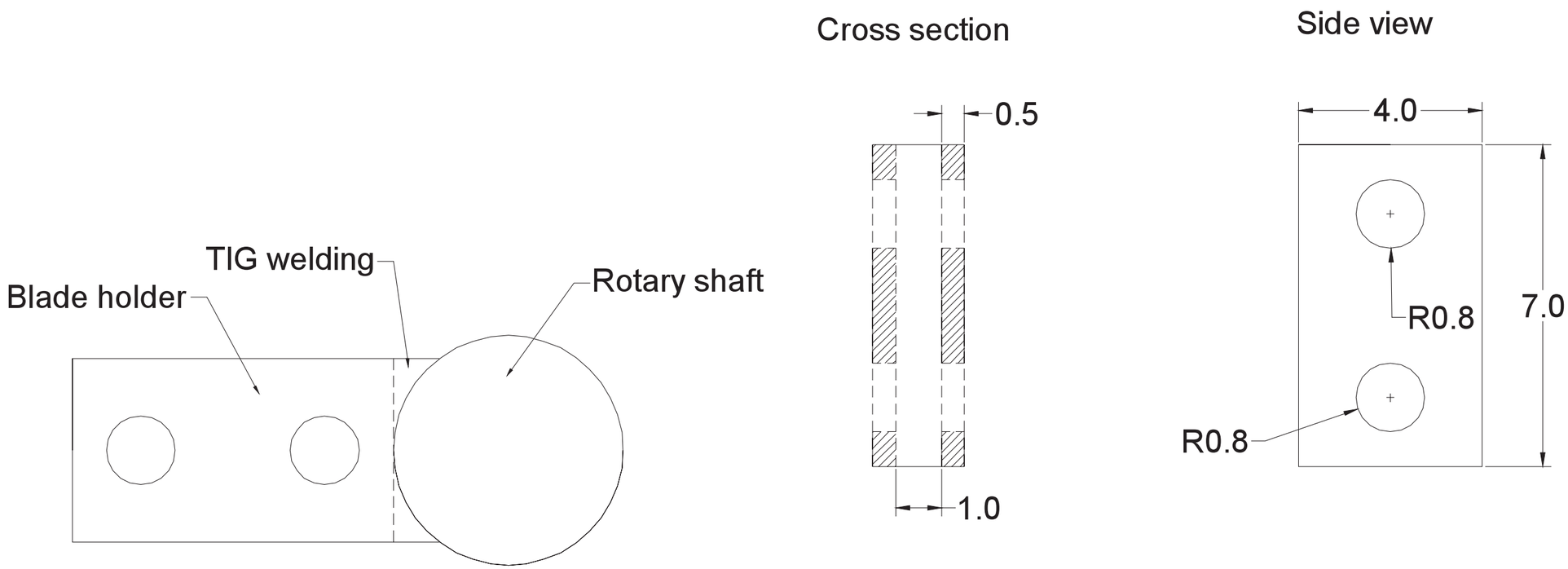

Rotary shaft for power tillage	Drawing # 1
Details of blade holder. Cross section, side and top views	
Scale 1:1 // Dimensions in cm	

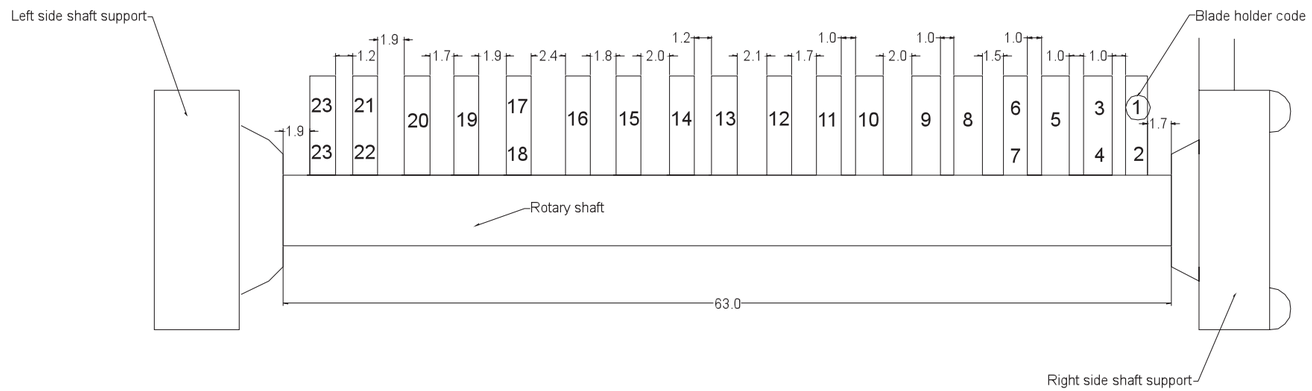

Rotary shaft for power tillage	Drawing # 2
Longitudinal disposition of blade holders and horizontal distances on the rotary shaft	
Scale 1:4 // Dimensions in cm	

NOTE:
This is not an actual representation of how the blade holders are set up on the shaft. It is a representation of their horizontal position along the shaft respect to each other. To see their vertical position, check drawings #3 and #4. Numbers represent the blade holder code, when two codes are represented together, means that those blade holders are in the same horizontal position, but with different angle.

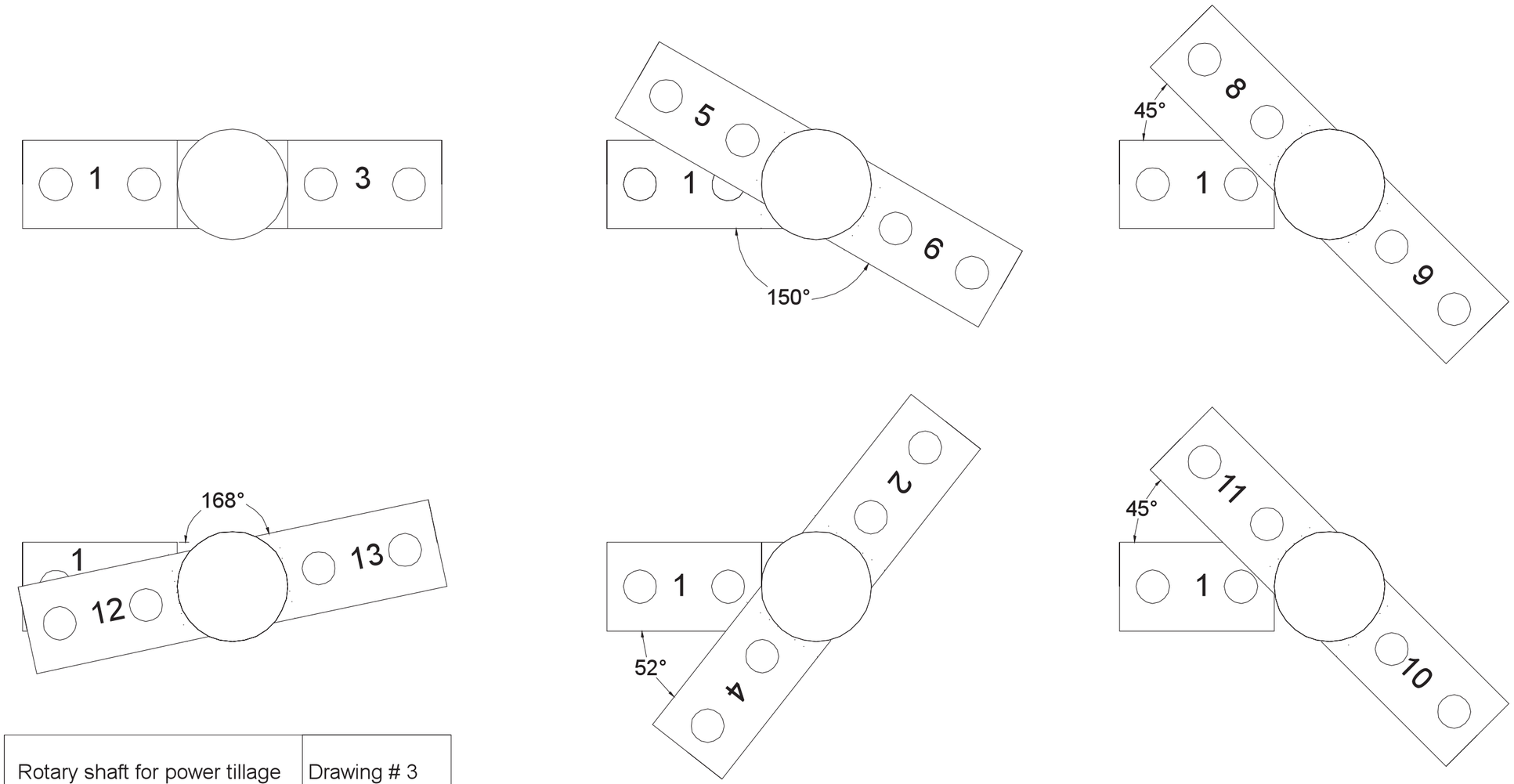

Rotary shaft for power tillage	Drawing # 3
Horizontal angle of blade holders on the rotary shaft	
Scale 1::2 // Dimensions in cm	

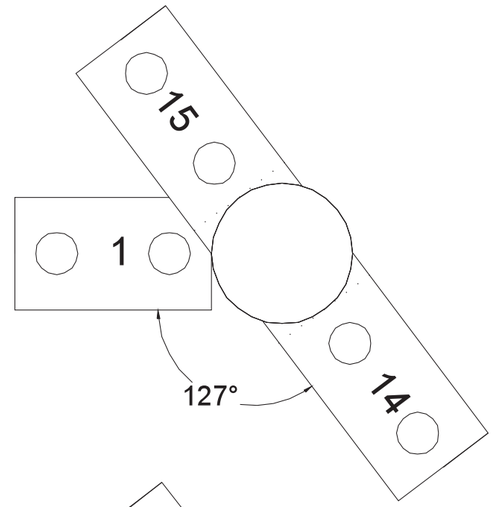

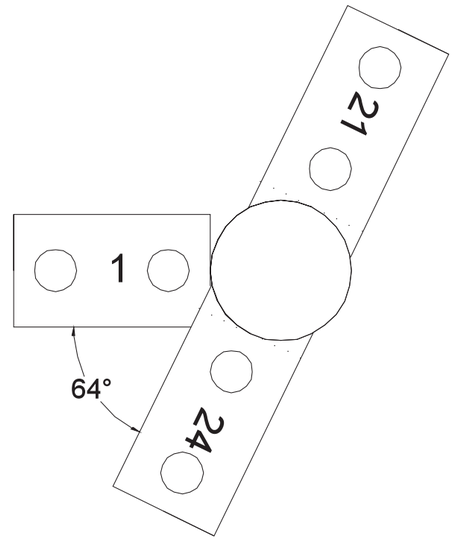

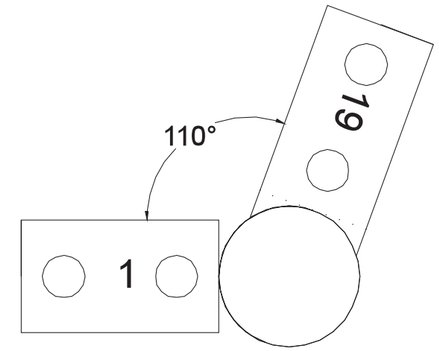

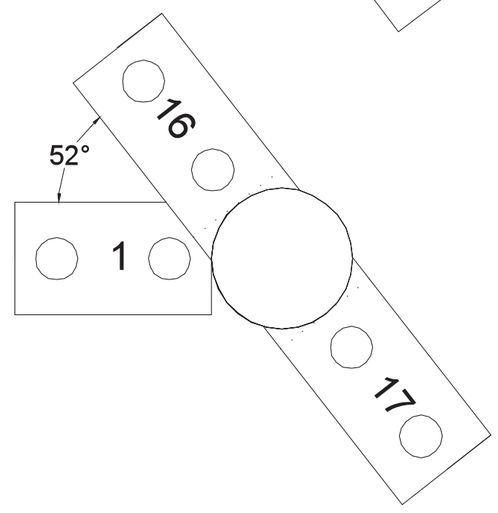

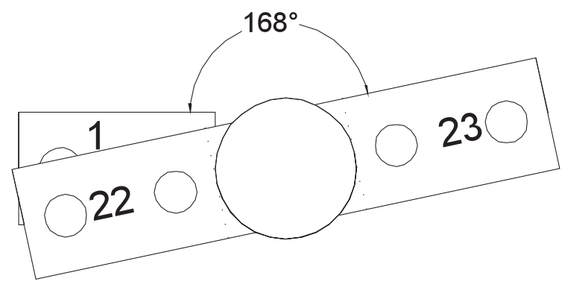

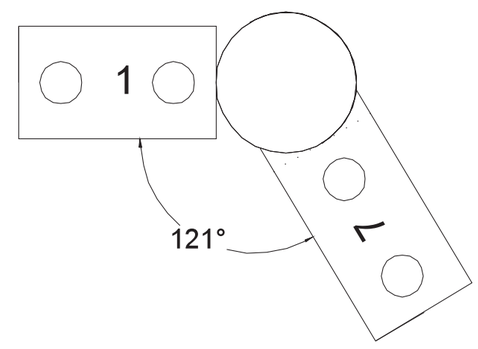

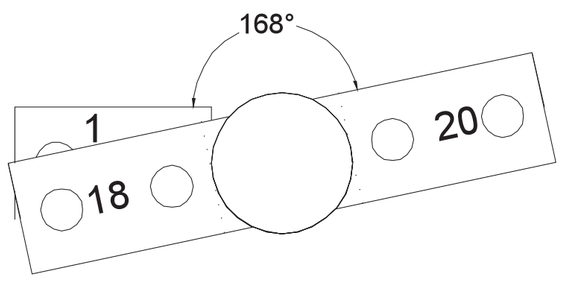

Rotary shaft for power tillage	Drawing # 4
Horizontal angle of blade holders on the rotary shaft	
Scale 1:2 // Dimensions in cm	

Photo: Israil Hossain

CHAPTER

5

Two-wheeled-tractor-based strip tillage practices

Two-wheeled-tractor-based strip tillage practices

Strip tillage (ST) is a method of reducing tillage that is often practiced under CA. With strip tillage, only narrow strips (sometimes called slots) of the soil surface are tilled, and seed and fertilizer are placed within. The depth of the strips varies, depending on the crop species planted and soil moisture status. ST can be practiced with four- and two-wheeled tractors, the latter of which is common in Bangladesh (Figure 1). Farmers sometimes refer to ST as "zone tillage," "band tillage," or "row tillage," because less than 25 percent of the soil surface is disturbed (Morrison 2002). ST has several advantages - by reducing the area of the soil surface tilled, the tractor fuel and energy requirement is lowered, saving costs for both farmers and tillage service providers. Hossain et al. (2012) documented that the effective field capacity of a two-wheeled-tractor-driven ST drill increased 19 percent and fuel consumption decreased 21 percent, compared to conventional seeding systems. In the same study, ST reduced the total cost of planting operations by 62 percent. With the right equipment, ST can also be performed when the field surface is covered with a moderately dense mulch or anchored crop residues, making it well suited to CA practices (Figure 2). Because inversion tillage operations can accelerate water evaporation from soil (Figure 3), ST is ideal in rainfed environments where soil storage of residual moisture and rainwater are critical for crop growth (Figure 4). Farmers experimenting with strip tillage are encouraged to try it on a small part of their field until they gain confidence in the method.

When farmers implement ST, the strips are formed by rapidly rotating knives attached to a rotovator powered by the movement of the tractor (Figure 5). Seed and fertilizer are placed next to each other within the strip, after they pass from storage hoppers through tubes and the slot opener into the soil. The direction of equipment travel and the direction of rotating blades are the same, and the soil opener is positioned behind the line of rotating blades. Openers can be adjusted vertically and horizontally to change seeding depth and row-to-row spacing, which usually starts with a minimum width of 20 cm between rows. Because the arrangement of rotating blades and opener are linear and uniform, only small portions of the soil surface are disturbed. As in ZT arrangements, it is best to use "inverted T" type tine openers, if available (Chapter 12). In some ST arrangements, the soil is deposited again and

Photo: Israil Hossain

Figure 1. Two-wheel-tractor-driven ST drill with press wheels. The operator would typically guide this self-propelled tractor with the handles and walk behind the press wheels.

Photo: Timothy J. Krupnik

Figure 2. Maize established by strip tillage in Putakhali, southern Bangladesh. Note the thick mulch layer created by seeding into the residues of the previous rice crop. In this case, about 25 percent of the preceding rice crop's residues were retained in anchored conditions. They were pressed down into a mulch with the seed drill's roller-bar, which is common on Chinese made PTOS units that are frequently converted to strip tillage.

pressed down into the strip by the addition of a wheel (called a press wheel) that exerts limited pressure and improves soil-seed contact to facilitate germination. However, many farmers and agricultural service providers practice ST without the addition of press wheels.

To perform strip tillage using a 2WT, PTOS equipment is required. The PTOS can be easily hitched to the 2WT by a coupling hitch. The initial PTOS models were made only to till and seed. However, models with fertilizer hoppers and placement apparatuses are becoming more common. For seed metering, ST drills use both fluted roller (Chapter 7) and inclined plate systems (Chapter 8), depending on the make and the model of the drill. Fertilizer is usually metered out using a fluted roller system. PTOS or ST drills have a high-speed rotovator with female cup-holders into which the blades for tillage are inserted and bolted into place (Figure 5).

The average speed of the rotovator shaft, and hence the tillage blades, is 400-450 rpm. Whereas 48 blades are used for full rotary tillage, the bolt-on blades can be removed to perform strip tillage.

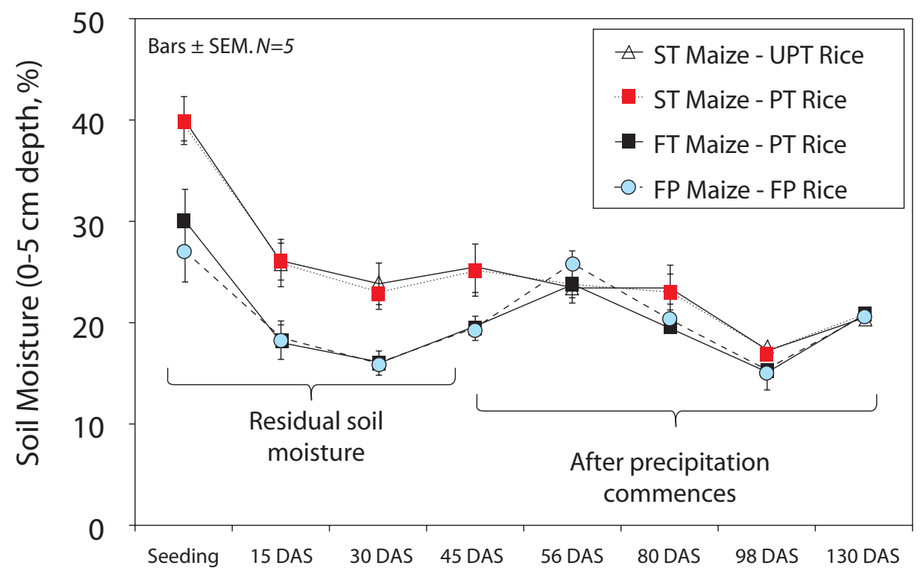

Figure 3. Soil moisture at the 0-5 cm depth as a function of number of days after crop sowing (DAS) at Putakhali, southern Bangladesh. During the 2011-2012 dry season, rainfed maize under farmer-managed trials compared strip tilled maize followed by unpuddled transplanted rice (ST Maize-UPT rice), strip tilled maize followed by puddled transplanted rice (ST Maize-PT Rice), compared to full tillage maize-rice (FT maize-PT rice) and farmers' practice maize-rice (FP maize-FP rice).

The number of blades to be left on the rotovator shaft depends on the crop sown. For example, wheat is typically seeded at a 20 cm spacing between rows. This requires 24 blades in six groups, each group corresponding to a single strip. Conversely, maize is sown at much larger distances between rows, and therefore typically requires only two sets of four blades to make two strips per tractor pass. The reduction in blade number and their arrangement makes ST equipment ideal for minimizing torque requirements and variation on the rotor shaft (Lee et al. 2003).

When performing ST, the blades should be arranged with the sweep of the blade facing opposite each other (Figure 5). The high-speed rotations of the blades cut the leftover residue of the previous crop and create the strip for seed and fertilizer placement. The standard size of the blades is 160 mm x 30 mm. Currently, many of the blades used for two-wheel tractor ST are fabricated in China. These blades have a sweep angle of 30°, with a curvature radius of 61 mm, although new designs are becoming available with less angle and curvature to minimize soil disturbance (Chapter 12). These new blades are more suitable for heavy clay soils that have a tendency to produce clods when sharp-angle blades are used and there is a moderate degree of soil moisture.

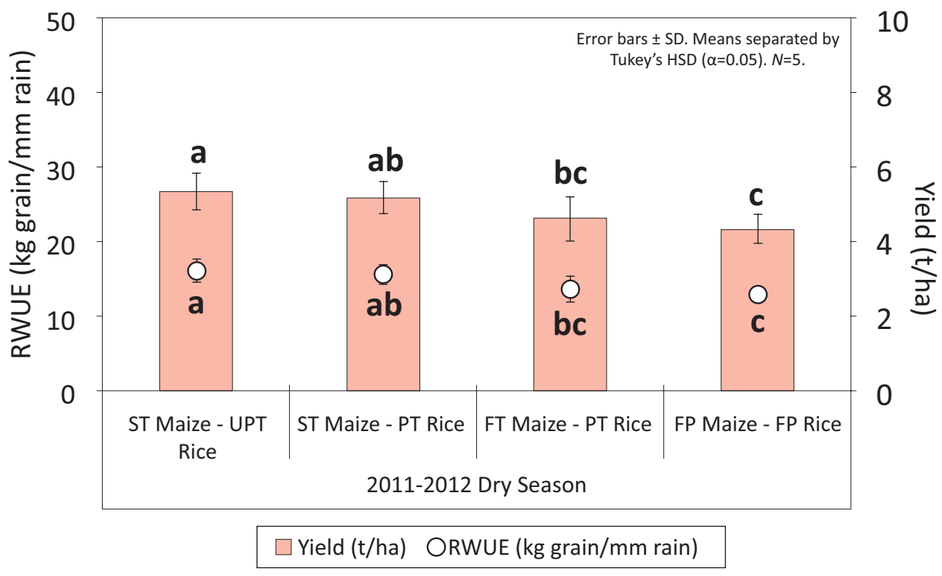

Figure 4. Grain yield and rainwater use efficiency (RWUE) of 2011-2012 dry season rainfed maize grown in Putakhali, southern Bangladesh, under farmer-managed trials comparing strip tilled maize followed by unpuddled transplanted rice (ST Maize-UPT rice), strip tilled maize followed by puddled transplanted rice (ST Maize-PT Rice), compared to full tillage maize-rice (FT maize-PT rice) and farmers' practice of maize-rice (FP maize-FP rice).

Photo: Santiago Santos Valle

Figure 5. ST blade arrangement on the central shaft of the rototiller on a PTOS. Most 2WT with rototillers have 48 blades. Half can be removed to provide six rows of strip tillage at 20 cm intervals between lines, which is usually recommended for wheat. The blades in this figure are arranged for such a situation. More blades can be removed for different spacing configurations for large-seeded crops.

Photo: Santiago Santos Valle

Photo: Santiago Santos Valle

References

Hossain, M. I., Hossain, I. Mamun, M. A. A., Siddique, N. A., Mahabubur Rahman, M., Rahman, M. Sq. 2012. Two wheel tractor operated strip tillage seeding equipment for dry land farming. International Journal of Energy Machinery. 5:35-41.

Lee, K. S., Park, S. H., Park, W. Y., Lee, C. S. 2003. Strip tillage characteristics of rotary tiller blades for use in a dry land direct rice seeder. Soil and Tillage Research. 71:25-32.

Morrison, J. E. 2002. Strip tillage for "no-till" row crop production. Applied Engineering in Agriculture. 18:277-284.

Photo: Santiago Santos Valle

Figure 6. Major components of Six Row Strip Till for PTOS: **1.** Gear box **2.** Fertilizer box with fluted roller metering system **3.** Seed box with inclined plate metering system **4.** Power axle **5.** Tillage unit cover **6.** Tillage blades **7.** Press wheels

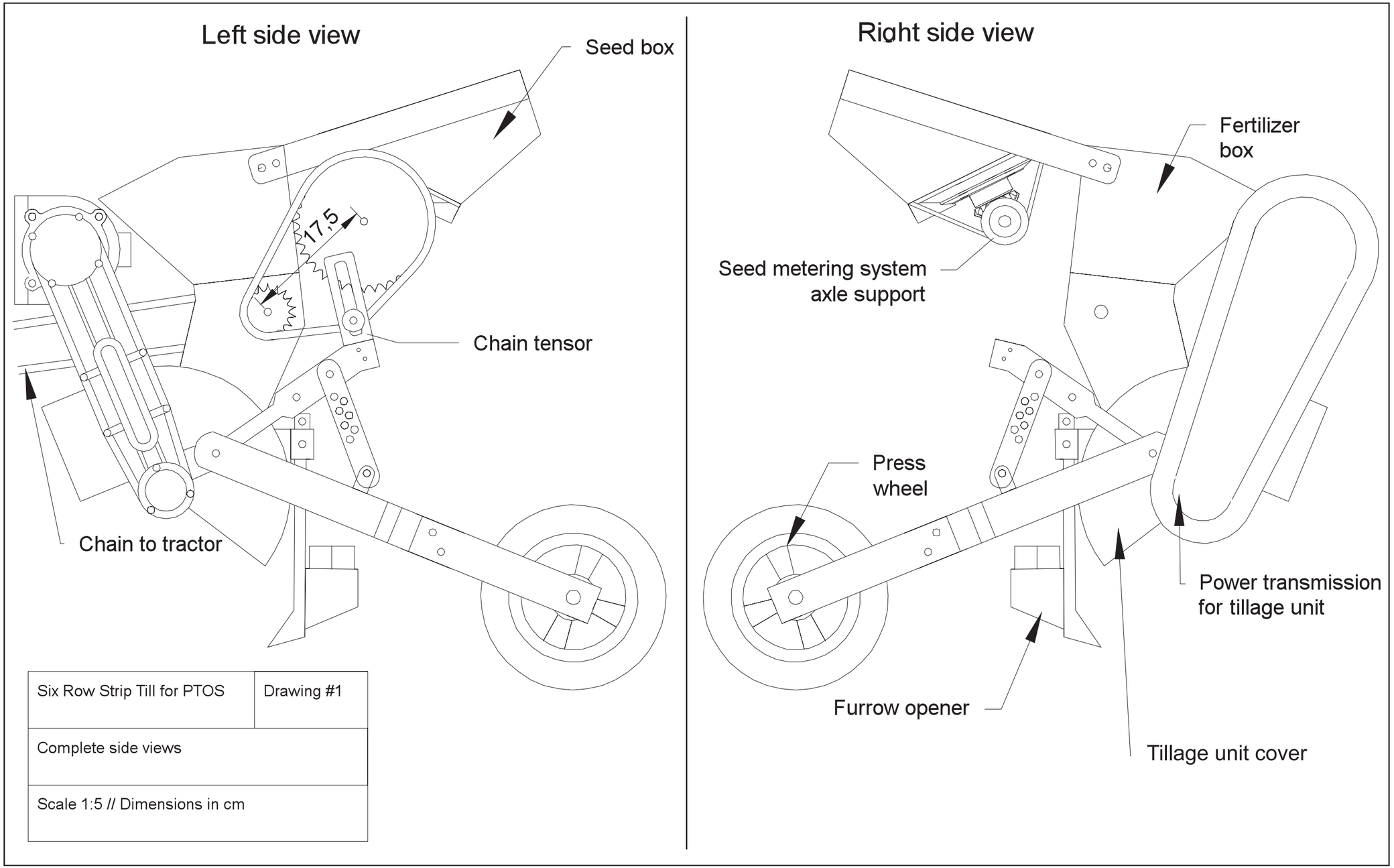
Left side view
Seed box
17.5
Chain tensor
Chain to tractor
Right side view
Fertilizer box
Seed metering system axle support
Press wheel
Power transmission for tillage unit
Furrow opener
Tillage unit cover
Six Row Strip Till for PTOS
Drawing #1
Complete side views
Scale 1:5 // Dimensions in cm

Left side view

40 teeth plate (seed metering) (for wheat, maize and rice)

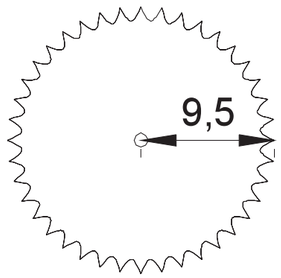

18 teeth plate (fertilizer metering)

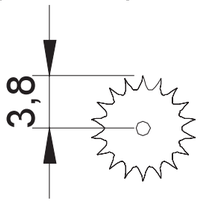

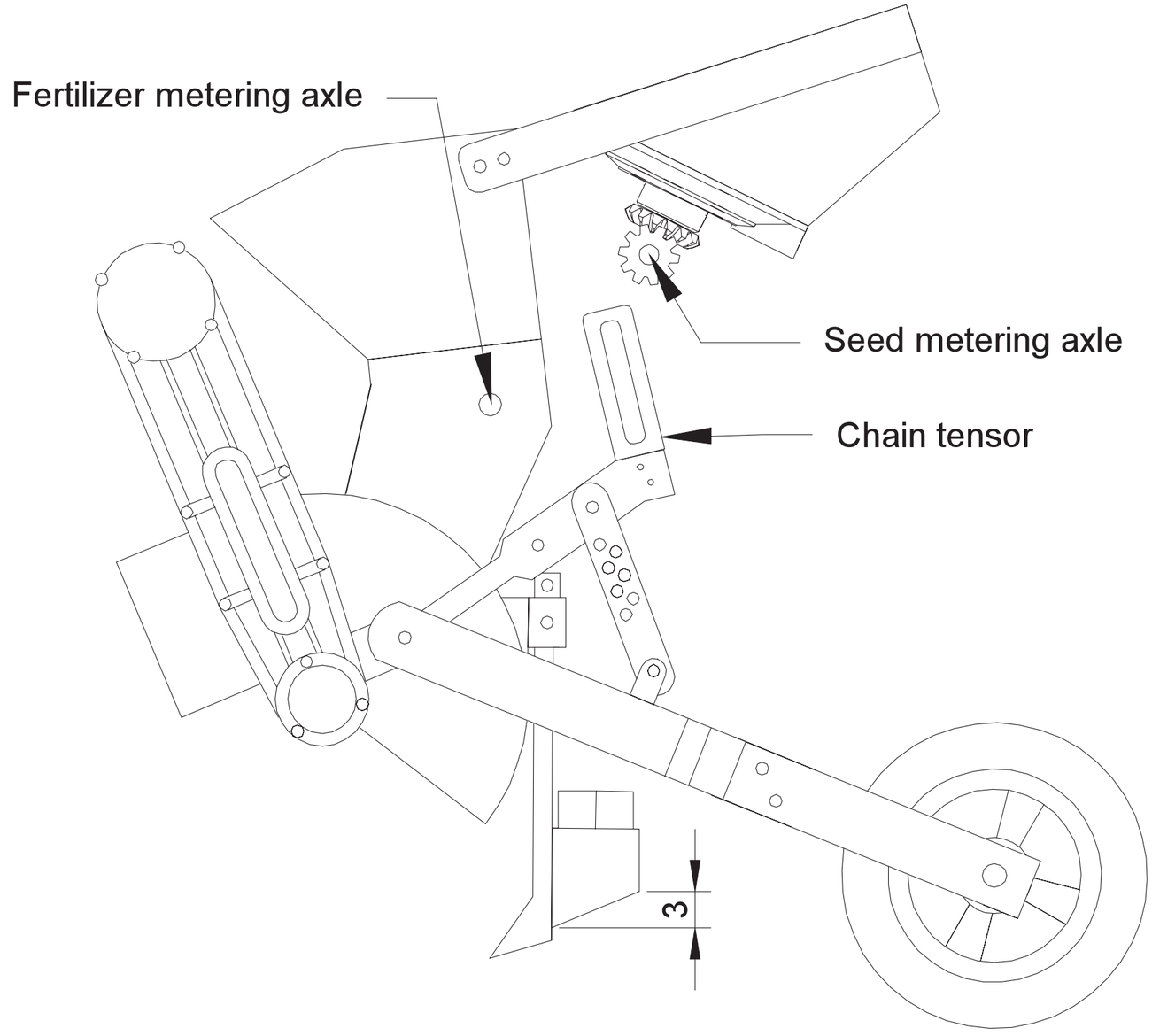

Six Row Strip Till for PTOS	Drawing #2
Seed metering system axles, plates and side view	
Scale 1:4 // Dimensions in cm	

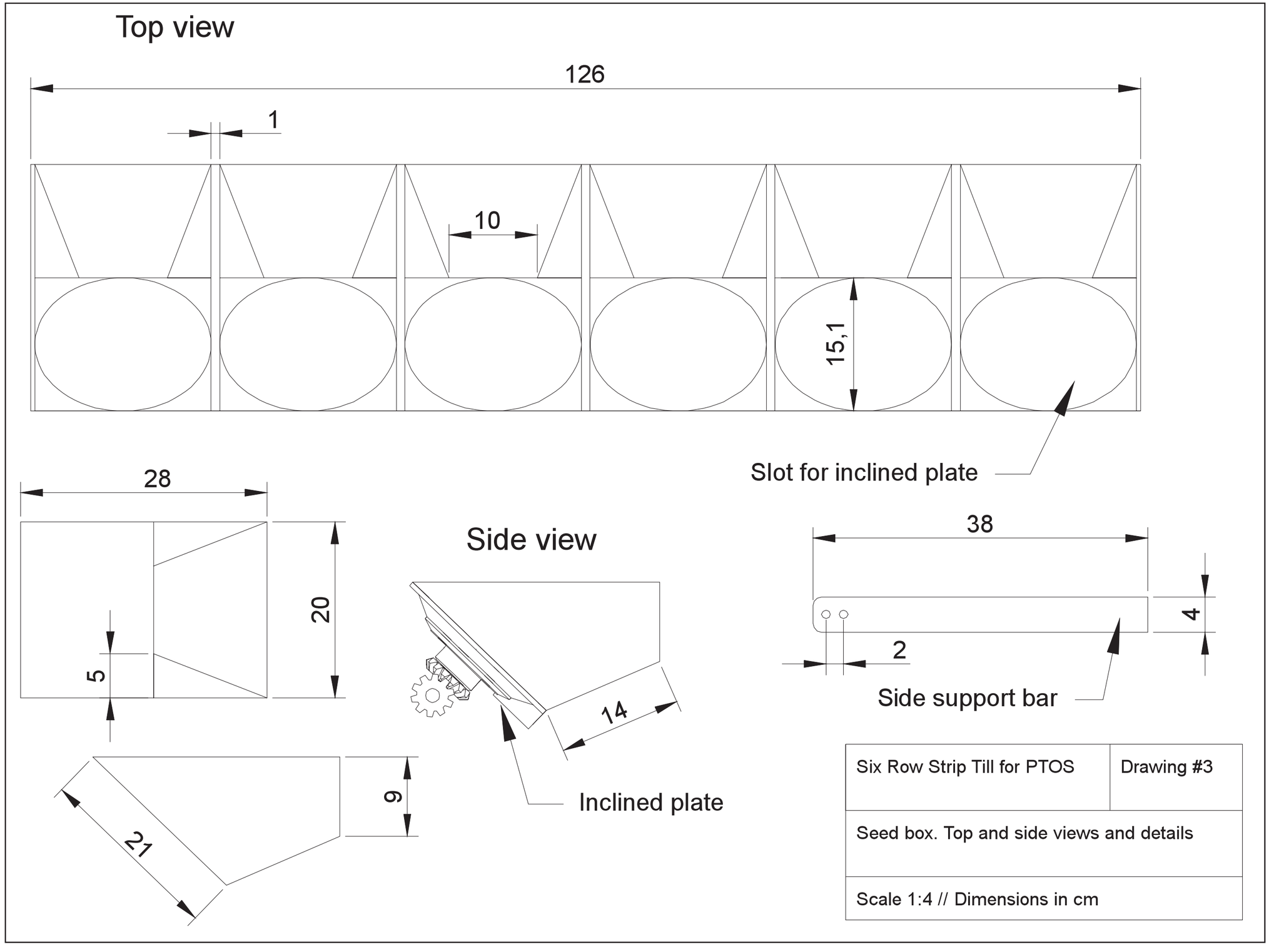
Top view
126
1
10
15,1
Slot for inclined plate
28
20
5
Side view
14
Inclined plate
9
21
38
4
2
Side support bar
Six Row Strip Till for PTOS
Drawing #3
Seed box. Top and side views and details
Scale 1:4 // Dimensions in cm

Tensor bar

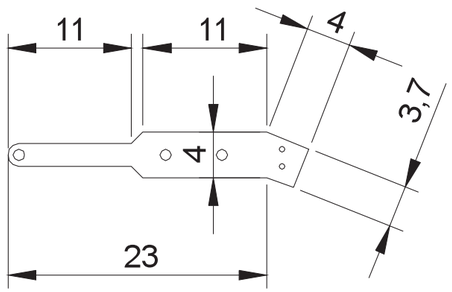

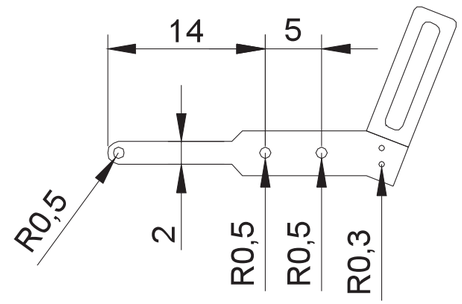

Chain tensor (front and side views)

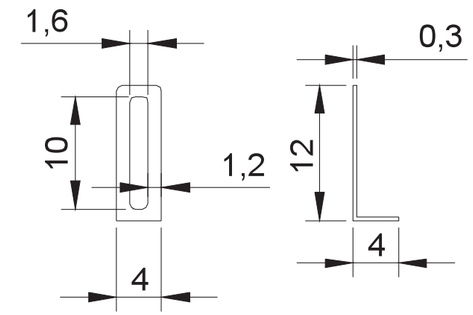

Junction bar between wheel and tensor bars (0.5 cm thickness)

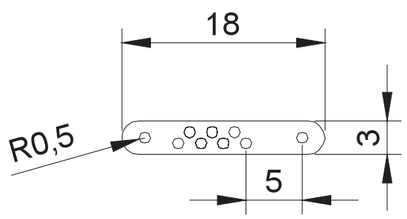

Press wheels distribution

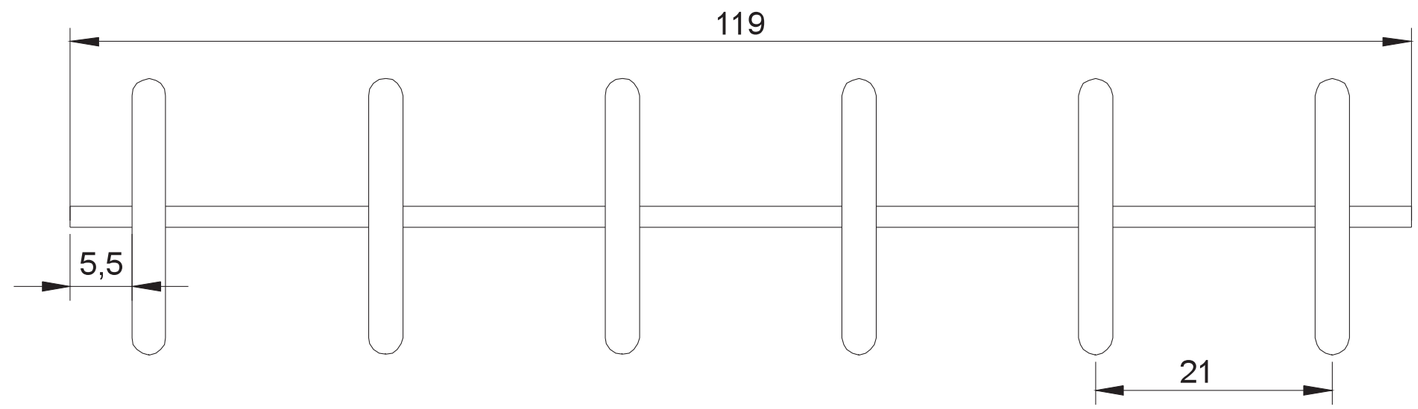

Press wheel bar and wheel details

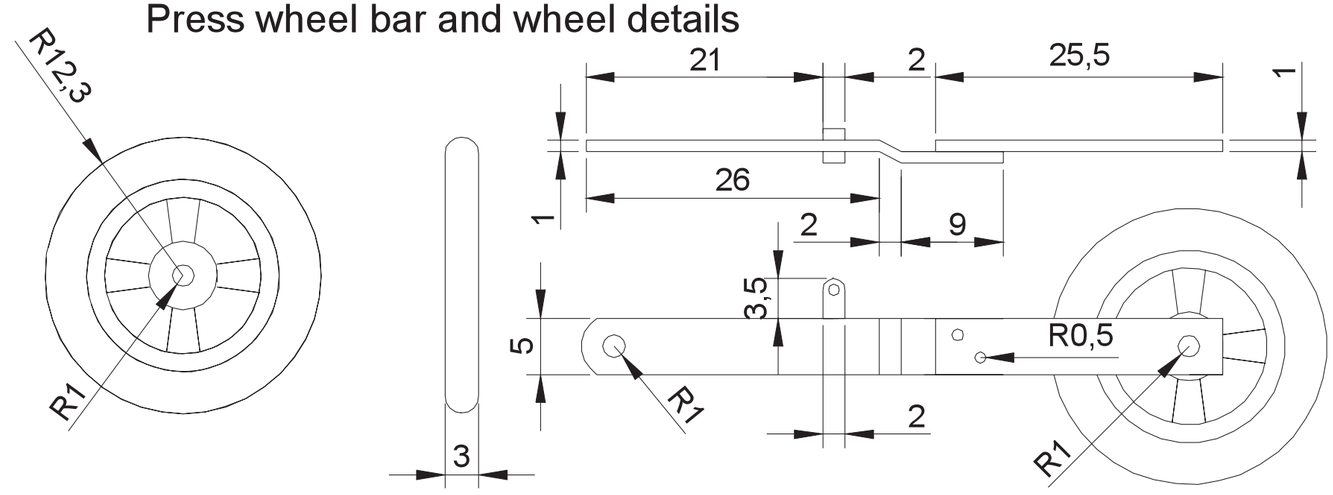

Six Row Strip Till for PTOS	Drawing #4
Press wheel details. Chain tensor and wheel support bar details.	
Scale 1:5 // Dimensions in cm	

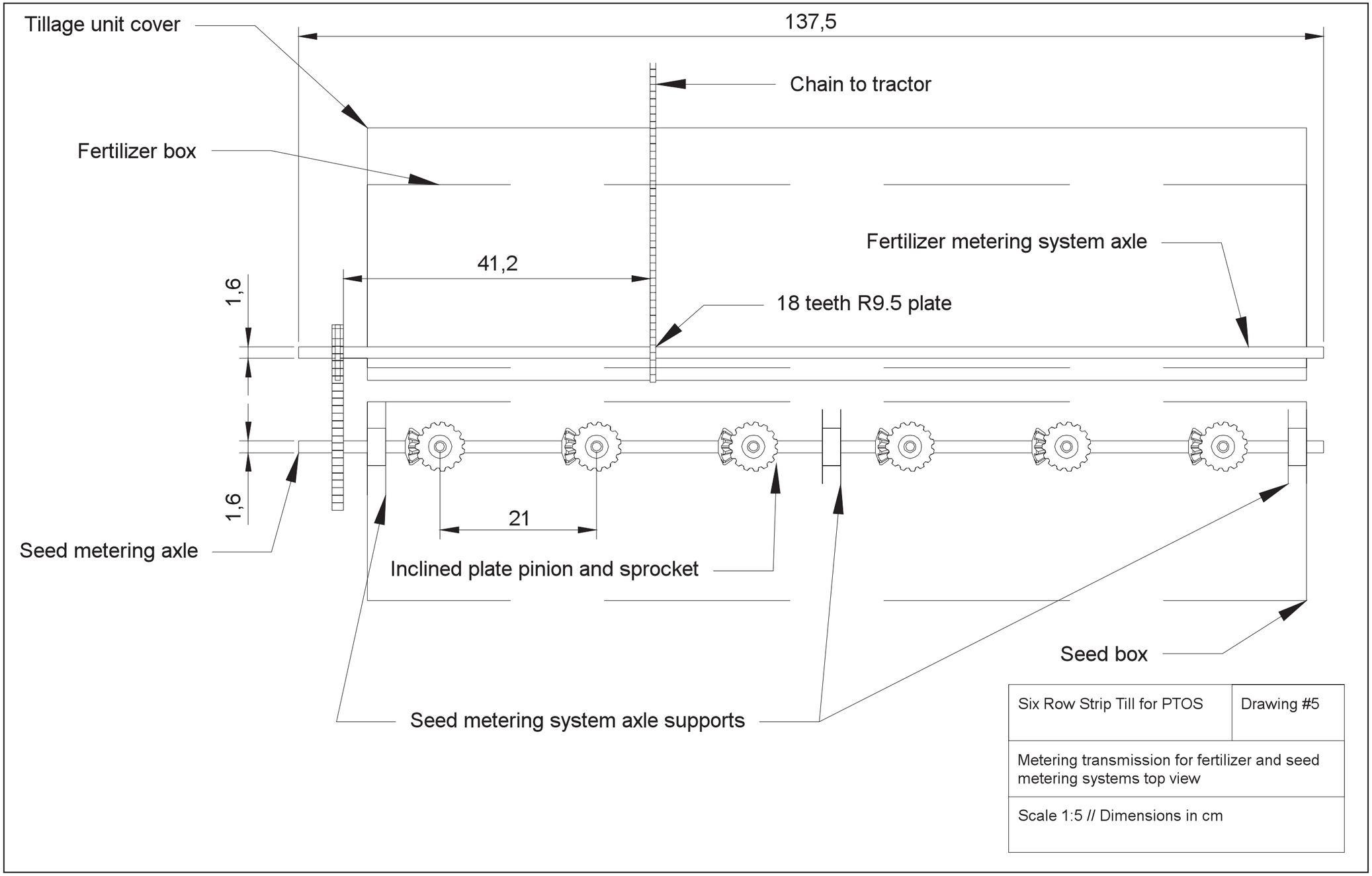
Tillage unit cover
137,5
Chain to tractor
Fertilizer box
Fertilizer metering system axle
41,2
1,6
18 teeth R9.5 plate
1,6
21
Seed metering axle
Inclined plate pinion and sprocket
Seed box
Seed metering system axle supports
Six Row Strip Till for PTOS
Drawing #5
Metering transmission for fertilizer and seed metering systems top view
Scale 1:5 // Dimensions in cm

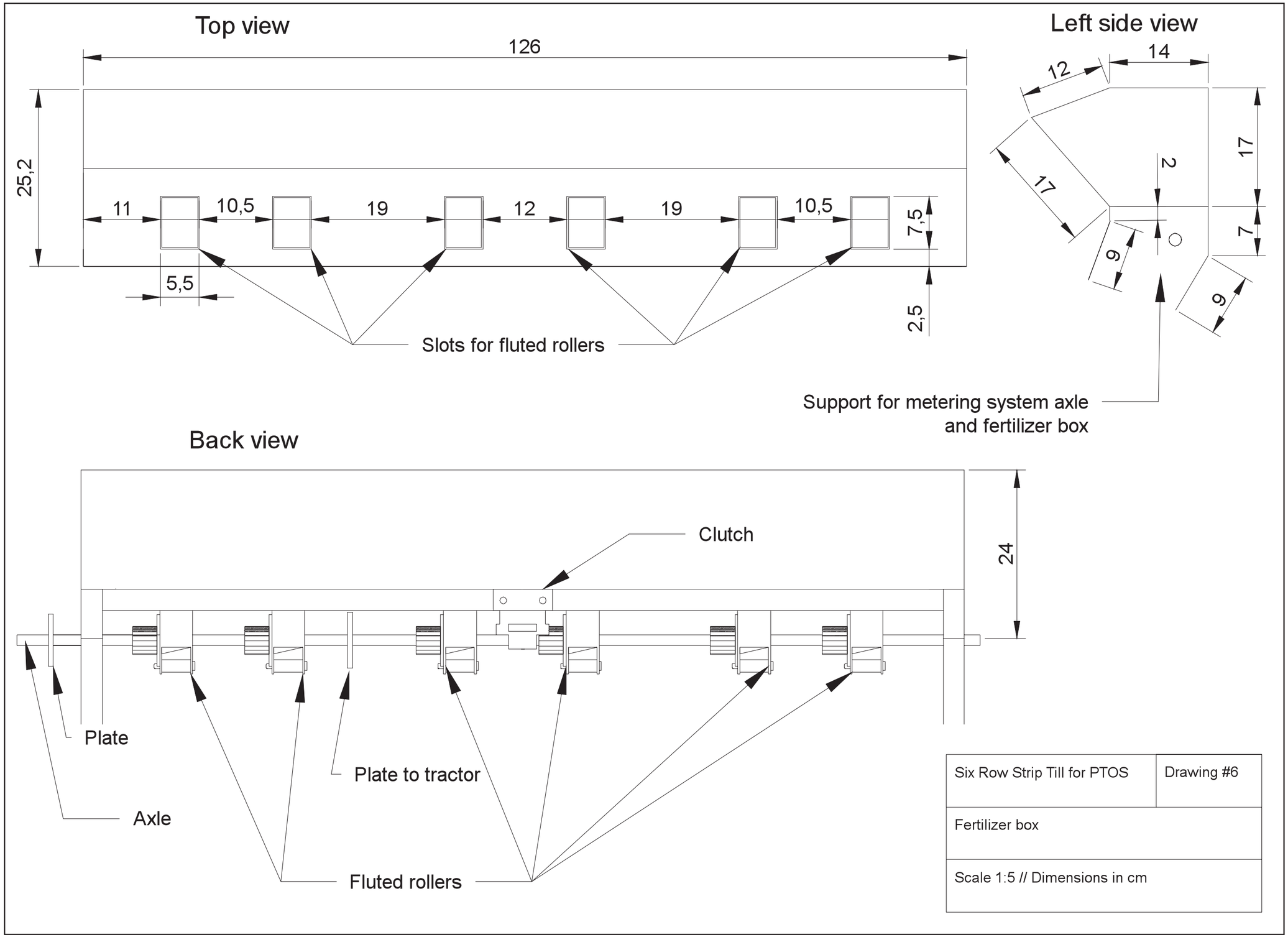
Top view
126
25,2
11
10,5
19
12
19
10,5
7,5
5,5
2,5
Slots for fluted rollers
Left side view
12
14
17
17
2
7
9
9
Support for metering system axle
and fertilizer box
Back view
Clutch
24
Plate
Plate to tractor
Axle
Fluted rollers
Six Row Strip Till for PTOS
Drawing #6
Fertilizer box
Scale 1:5 // Dimensions in cm

Furrow openers disposition back view

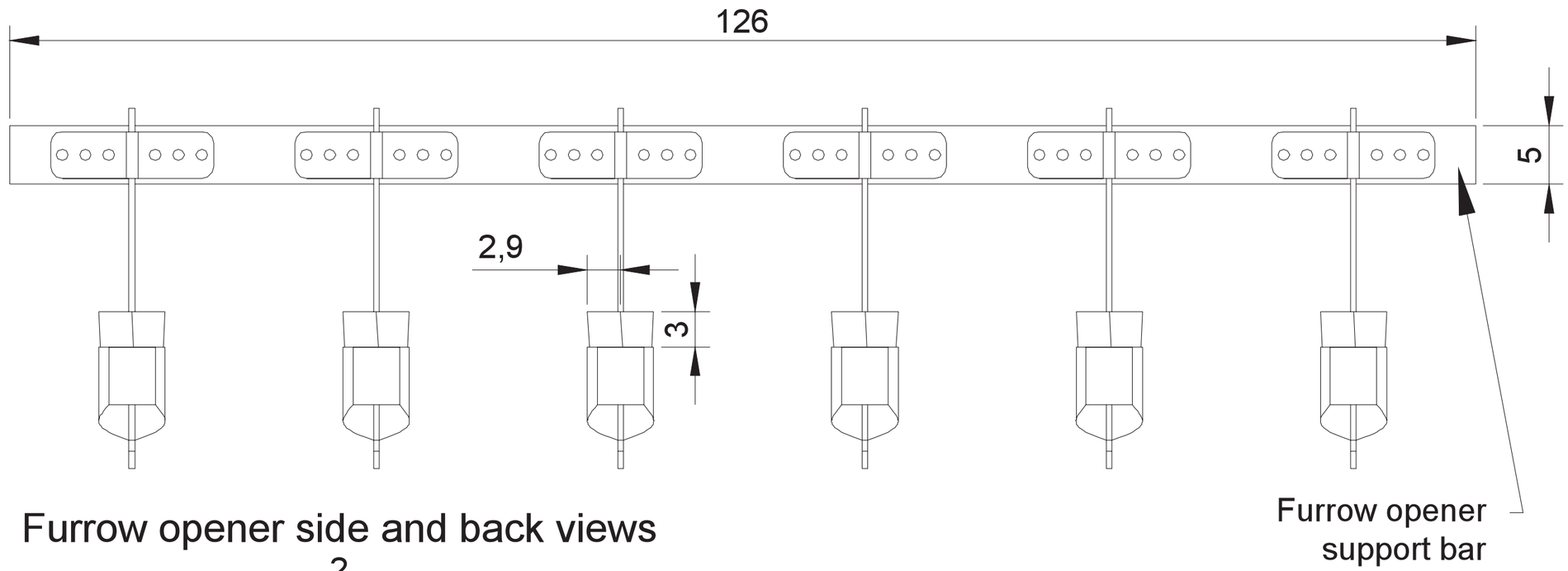

Furrow opener side and back views

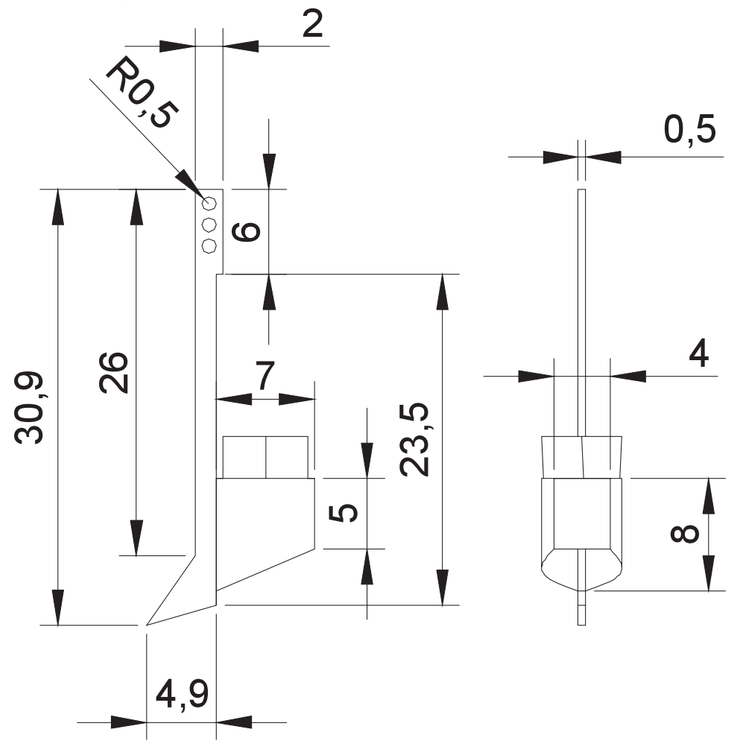

Furrow opener holder (front and side view)

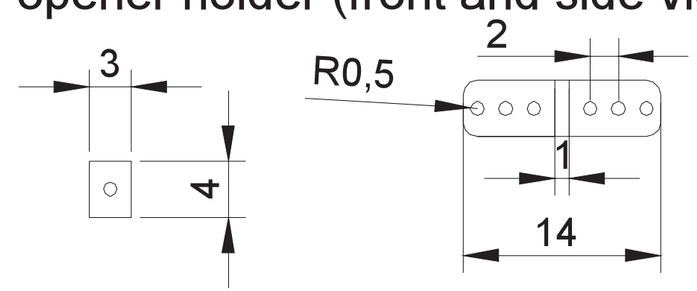

Six Row Strip Till for PTOS	Drawing #7
Furrow opening system and details	
Scale 1:4 // Dimensions in cm	

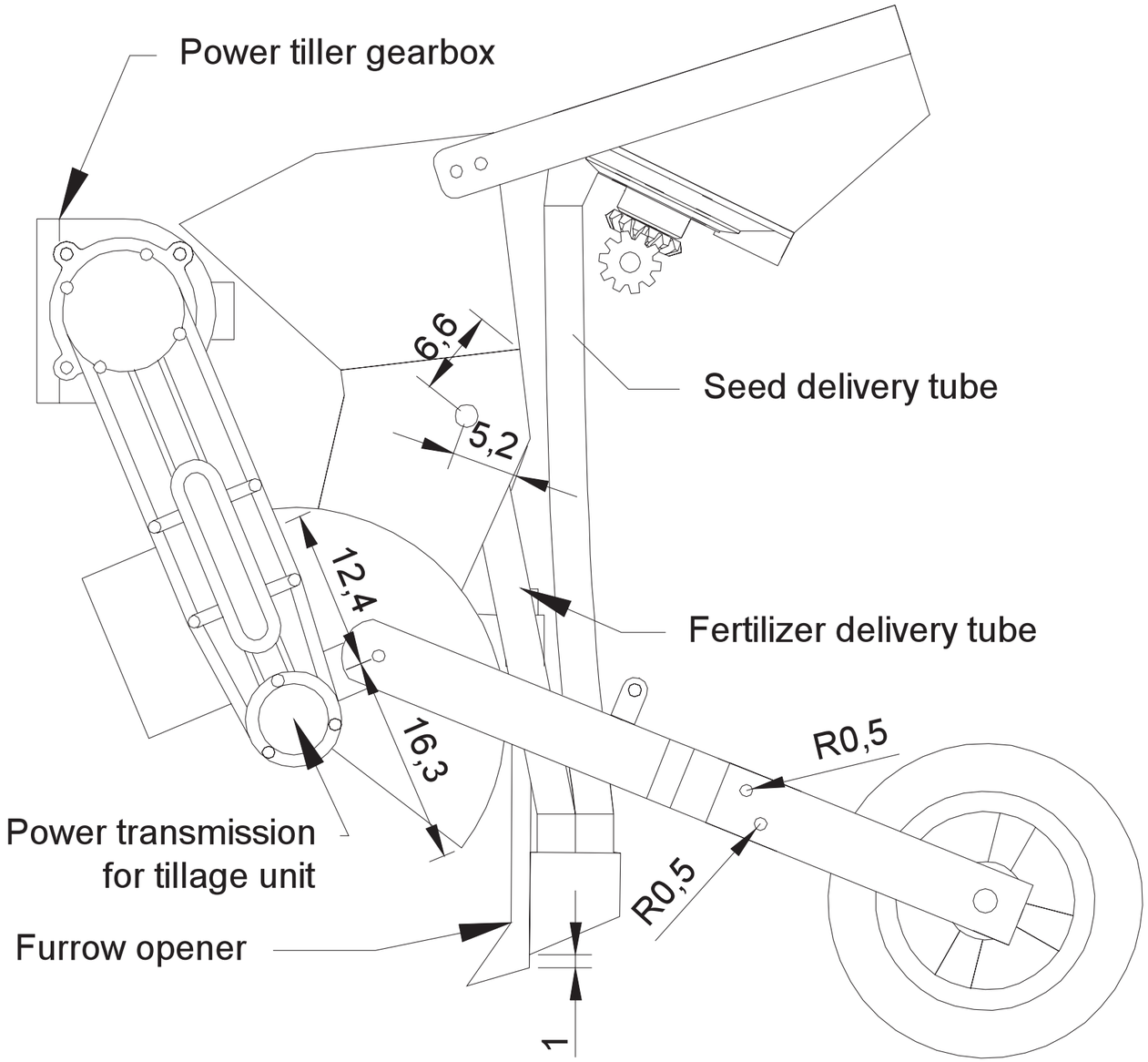

Six Row Strip Till for PTOS	Drawing #8
Disposition of seed and fertilizer delivery tubes	
Scale 1:4 // Dimensions in cm	

Perspective view

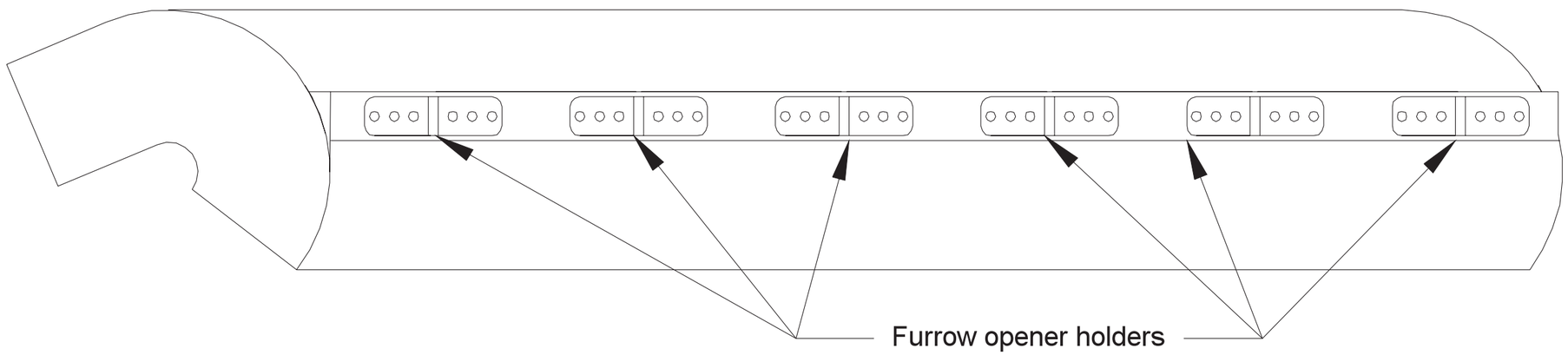

Side view

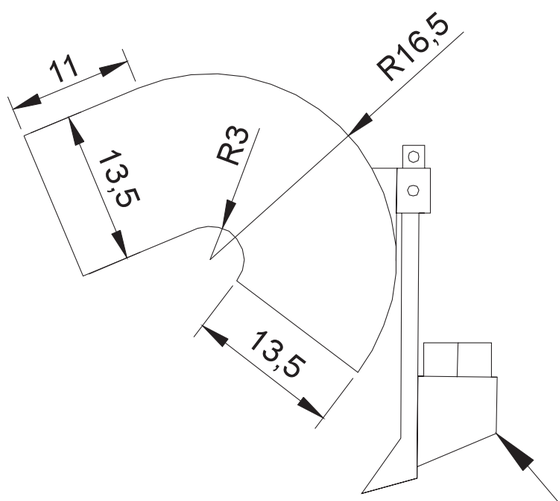

Back view

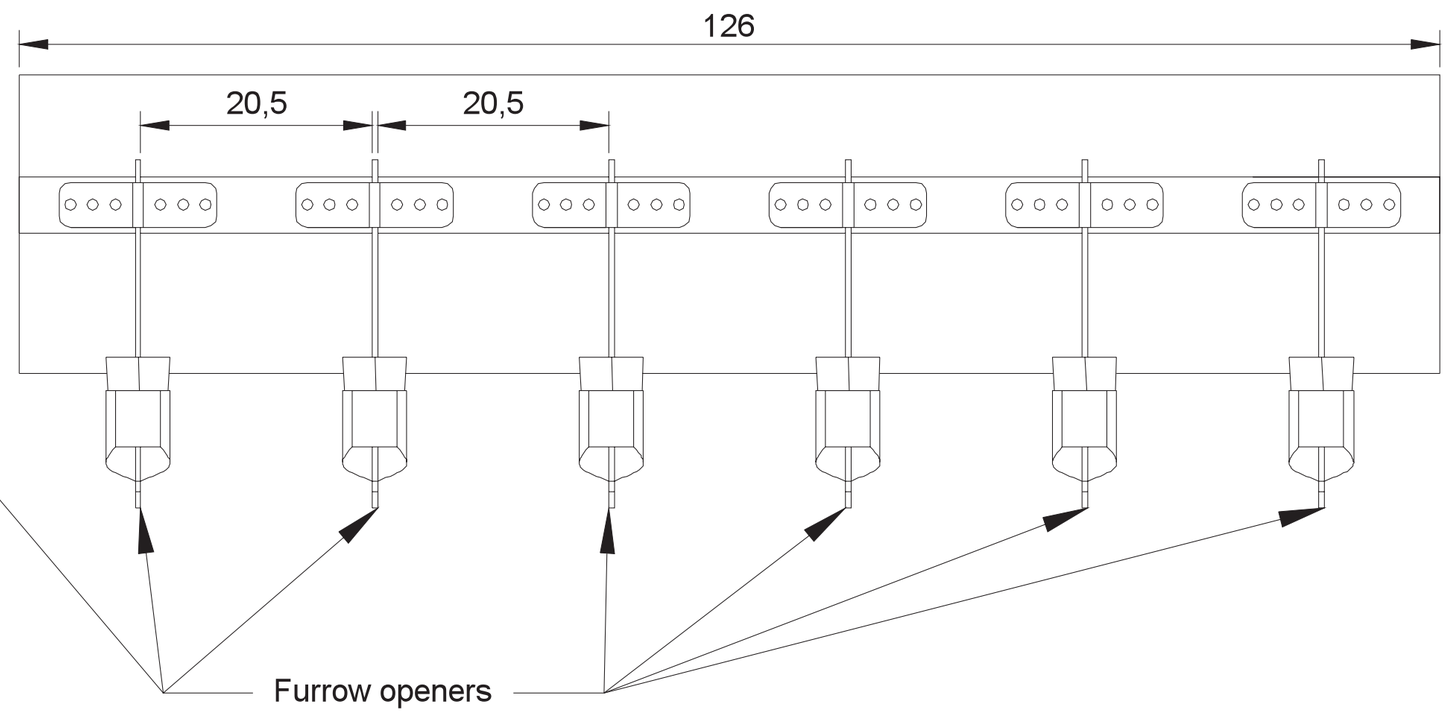

Six Row Strip Till for PTOS	Drawing #9
Tillage unit cover. Side and perspective views	
Scale 1:5 // Dimensions in cm	

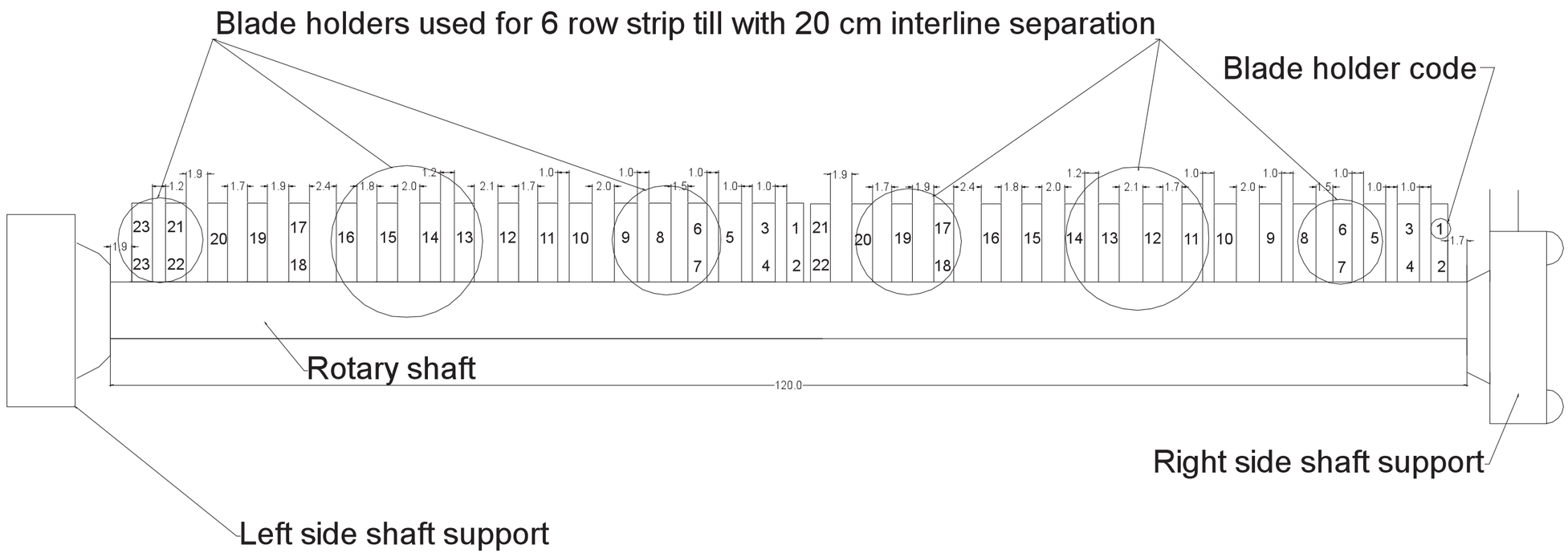

Six Row Strip Till for PTOS	Drawing #10
Disposition of blades in the tillage axle for six row strip till operation	
Scale 1:4 // Dimensions in cm	

NOTE:
This is not an actual representation of how the blade holders are set up on the shaft. It is a representation of their horizontal position along the shaft respect to each other. To see their vertical position, check drawings #3 and #4 in chapter 4 in this book. Numbers represent the blade holder code, when two codes are represented together, means that those blade holders are in the same horizontal position, but with different angle.
The fact that numbers are repeated means that those that are repeated have the same angle.

Photo: Timothy J. Krupnik

CHAPTER

6

The axial flow pump for surface water irrigation, drainage, and fisheries

The axial flow pump for surface water irrigation, drainage, and fisheries

Axial flow pumps, or AFPs, are an established technology whose development traces to Vietnam and Thailand in the 1960s, and which are now common throughout Southeast Asia. Discharge of water from AFPs is axial - pumping is in a direction parallel to the pump shaft, rather than perpendicular as in centrifugal pump models (Figure 1). AFPs were initially developed by innovative farmers without support from research institutions (Biggs 2011; Chinsuwan & Chochran, 1986). AFPs are easily powered with the engine of a 2WT (typically 12 or 16 HP) or other even smaller engines. The AFP is also widely referred to as a "propeller pump" because the impeller works much like a boat propeller (Figure 2). The water discharge capacity and fuel efficiency of an AFP are typically two to three times higher than a centrifugal pump at lifts below 3 m (IRRI 1983; Kathirvel et al. 2000 and Santos Valle et al. unpublished data). In the early 1970s, the Agri-Engineering group at the Philippine-based IRRI improved the impeller blade's design, which aided the spread of the AFP for low-lift irrigation to other Southeast Asian countries (IRRI, 1983). In this region, AFPs are now widely employed where surface water needs to be raised 1-3 m for irrigation and drainage, or for small- and large-scale fish and shrimp farming facilities. A large industry has developed around AFP manufacturing (Figure 3) and, when coupled with flexible hosepipe, already commonplace in the Asian irrigation market, the potential of the AFP to deliver water efficiently can be increased because of reduced conveyance costs and losses.

Within Bangladesh, early prototypes of locally manufactured models also show an average improvement in water delivery efficiency over centrifugal low-lift pumps (LLPs) by an average of 21 to 52 percent between 1-2 m water lift heights. Efficiency declines at a 3 m lift height and can be negative relative to centrifugal LLPs, though two models have still shown between 0 and 4 percent efficiency at this height (Figure 4). If used for saltwater fisheries, AFP construction requires stainless steel that dramatically increases costs. However, if used for freshwater fisheries, drainage, or irrigation, conventional steel sheets can be used, which keeps the pump costs at $150-$250, depending on the make and size. When used to lift and move water, the AFP's impeller must be completely submerged because the pump is not self-priming. The most salient feature of the AFP is the long, solid pump shaft, which is actually a hollow pipe through which the rotating shaft passes. These shafts can be manufactured to various lengths and widths as needed - some pumps can be up to 7.5 m long. However, longer pumps are not necessarily designed to increase depth or water lift potential. Instead, longer AFPs have been developed so that the engine powering the pump can be safely set up on canal, river, or pond banks, without risk of losing the equipment to the water. Given

Photo: Scott Justice

Photo: Timothy J. Krupnik

Figure 1. A 20.3 cm diameter axial flow pump (the blue pipe pumping river water) driven by a two-wheeled tractor engine (in red) in Cambodia (top). A similar pump operating in Thailand (below).

the cost of fuel to power irrigation and increasing attention to surface water irrigation in South Asia and Bangladesh in particular, energy-efficient AFPs constitute an appealing alternative to centrifugal pumping and are likely to become attractive for dry season Boro rice and other high-value cereals.

Construction

Simplified AFP "propeller pumps" use existing boat propellers that can easily be constructed by small manufacturers and provide considerably higher volumes of water compared to conventional centrifugal LLPs. To gain further efficiency and water delivery, more sophisticated impeller engineering is necessary. In the last decade, improvements in impeller design have advanced through the use of high-quality metal cutting, machining of the individual blades, the use of specialized jigs, and high-quality metal inert gas (MIG) welding. We provide the following suggestions to manufacturers interested in making AFPs:

1. Use improved lower shaft bushings (Teflon or Polytetrafluoroethylene [PTFE]-coated plastic bushings). Bushings can be lubricated by supplying a valve into which oil can periodically be introduced, thereby extending the life of the AFP by reducing wear and tear.
2. Use high-quality, sealed main bearings for the drive shaft's driven (pulley) end that is not submersed.
3. In longer AFPs (>4 m), a mid-shaft support bushing can be provided and lubricated as described above.
4. Curved, Thai-style diffuser vane bushing mounts (Figure 2; right) provide improved water discharge and delivery efficiency.
5. The outer housing or pipe casing of an AFP is usually made from welded sections of precision-cut and rolled 19-gauge steel sheets.

Photo: Scott Justice

Photo: Timothy J. Krupnik

Figure 2. Example of an axial flow pump diffuser vane with bushing mount in Thailand (left). The curved vanes redirect and straighten the swirl caused by the propeller adding even more velocity and increasing efficiency. On the right, another impeller design is shown.

Photo: Timothy J. Krupnik

Figure 3. Outside an axial flow pump production facility in Thailand.

6. Use of MIG welders is recommended, especially when working with thin gauge steel sheets, to reduce micro-pitting and leaks that occur from the use of the standard "stick" metal arc welder. MIG welds will reduce leakage of water from the pump body.
7. Clearance between the impeller and the pipe casing should be 6 mm or less. Where the clearance is larger, there is an increased chance of water leakage and reduction in water delivery efficiency.
8. Use protective inlet screens to assure that the pump impeller is not damaged by a foreign object sucked into the pipe. The screens should be sufficiently large so as to not cause increased load (head) on the pump, or to significantly increase its weight.

Safe operation

AFPs are self-priming. Although up to 6 m long, the larger 20-25.5 cm diameter models weigh less than 50 kg and can be carried by two people. AFPs can be connected via V-belts to 2WT engines or through direct coupling (specific engineering will be required for the latter option). At all times, keep away from the couplings and belts. Smaller (13-15 cm diameter) AFPs may be powered by low HP stationary diesel engines or electric motors. If electric motors are used, care must be taken to ensure safety and prevent electrocution. Children should never be allowed to approach a pump while it is in operation.

Specifications[1]

Pump diameter (mm)	Pump length (m)	Capacity (l/s)	Speed (RPM)	Prime Mover (HP)
150	3.70	40-60	1,910	10
150	4.45	48-68	1,920-2,030	12
150	5.46	47-60	1,840-1,920	12
146	3.80	31-51	2,560	12
152	6.70	34-51	2,395-2,572	14

1 Table data from tests conducted by CIMMYT and Bangladesh Agricultural Research Institute (BARI) at BARI Farm Machinery and Post-harvest Extension Division (Gazipur) in April and May 2013 with 5 different AFPs manufactured in Bangladesh.

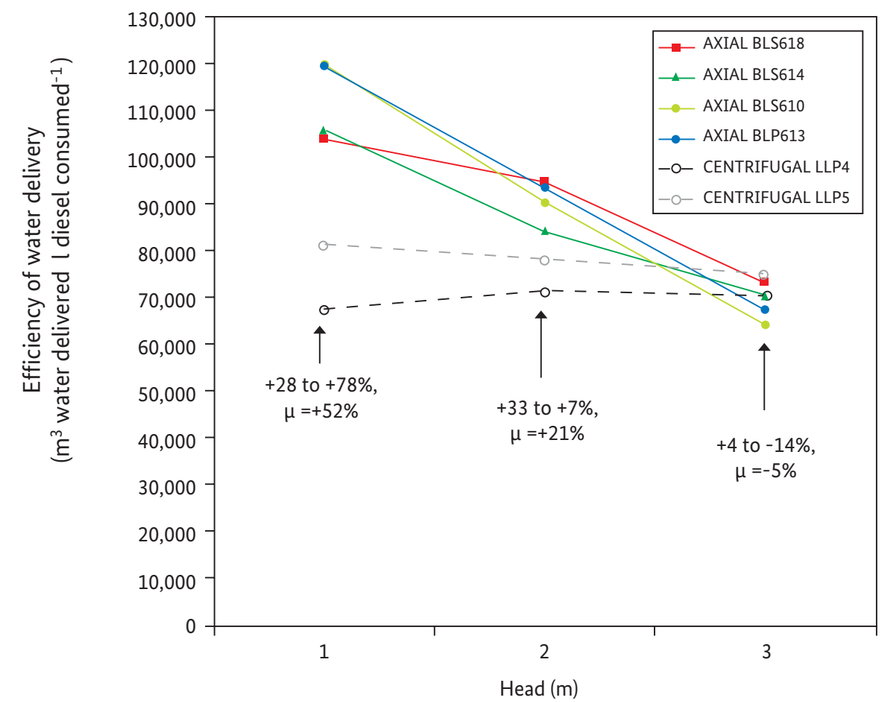

Figure 4. Water delivery efficiency of four prototype Bangladesh-made AFPs compared to two centrifugal LLPs at 1-3 m lift height. The ranges and averages (μ) of efficiency at each lift height are presented in comparison to the centrifugal pumps.

References

Biggs, D. 2011. Small machines in the garden: Everyday technology and revolution in the Mekong Delta. Modern Asian Studies. 46:47-70.

Chinsuwan, W., Chochran, B. J. 1986. The axial-flow low-lift pump in Thailand. International Conference on Small Farm Equipment for Developing Countries: Past Experiences and Future Priorities. Metro Manila, Philippines: International Rice Research Institute, pp. 195-203.

IRRI. 1983. Comparative advantages of axial-flow pumps over centrifugal pumps for low-lift irrigation. Metro Manila, Philippines.

Kathirvel, D. K., Rainan, R., Job, T. V. 2000. Development and evaluation of axial flow pump attached to a power tiller. Agricultural Mechanization in Asia, Africa, and Latin America. 31:18-22.

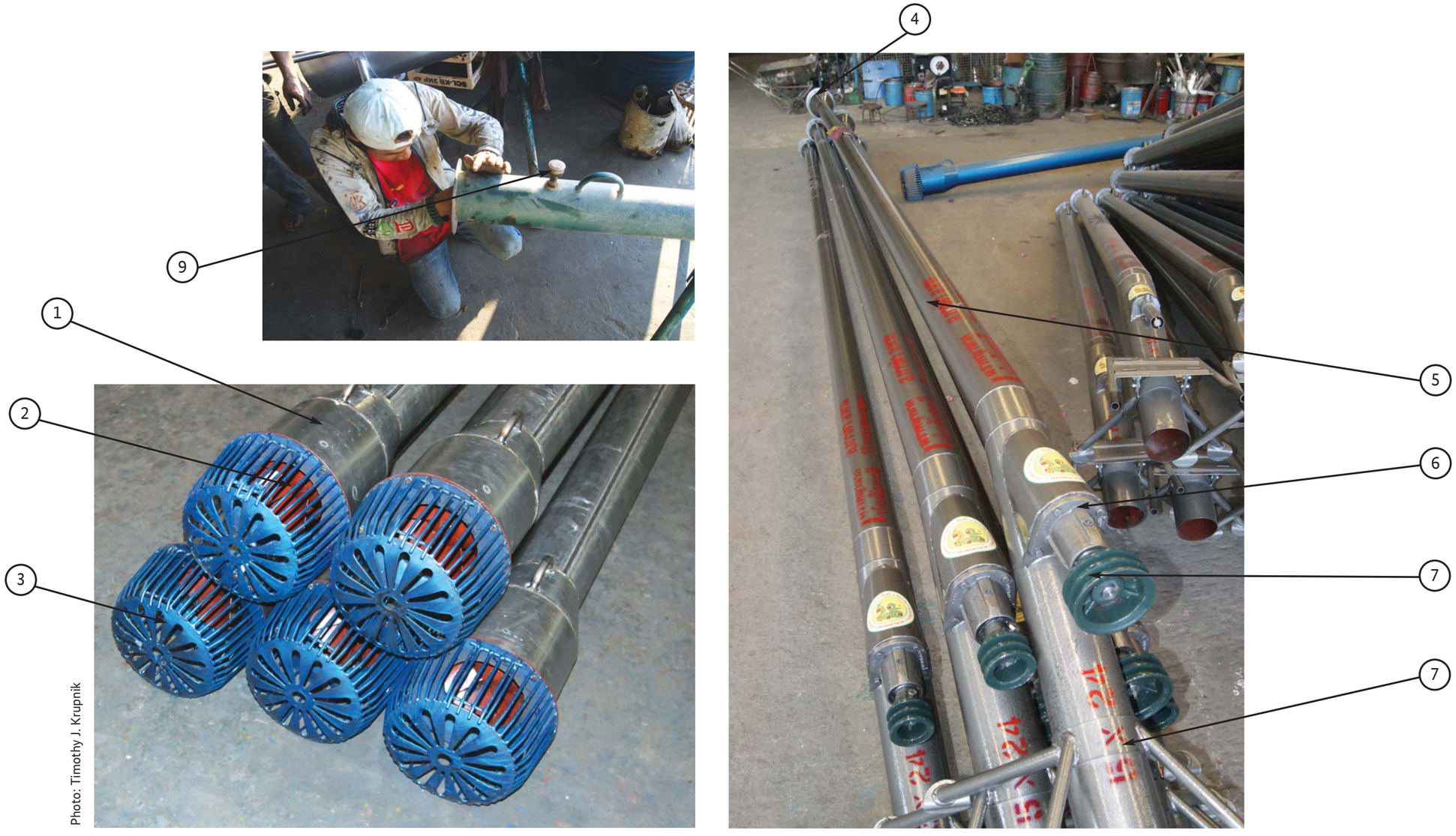

Photo: Timothy J. Krupnik

Figure 5. Major components of an axial flow pump: **1.** impeller housing; **2.** impeller (red); **3.** inlet cage; **4.** impeller housing; **5.** pump body; **6.** bushing; **7.** pulley; **8.** pump stand; and **9.** oil deposit for greasing.

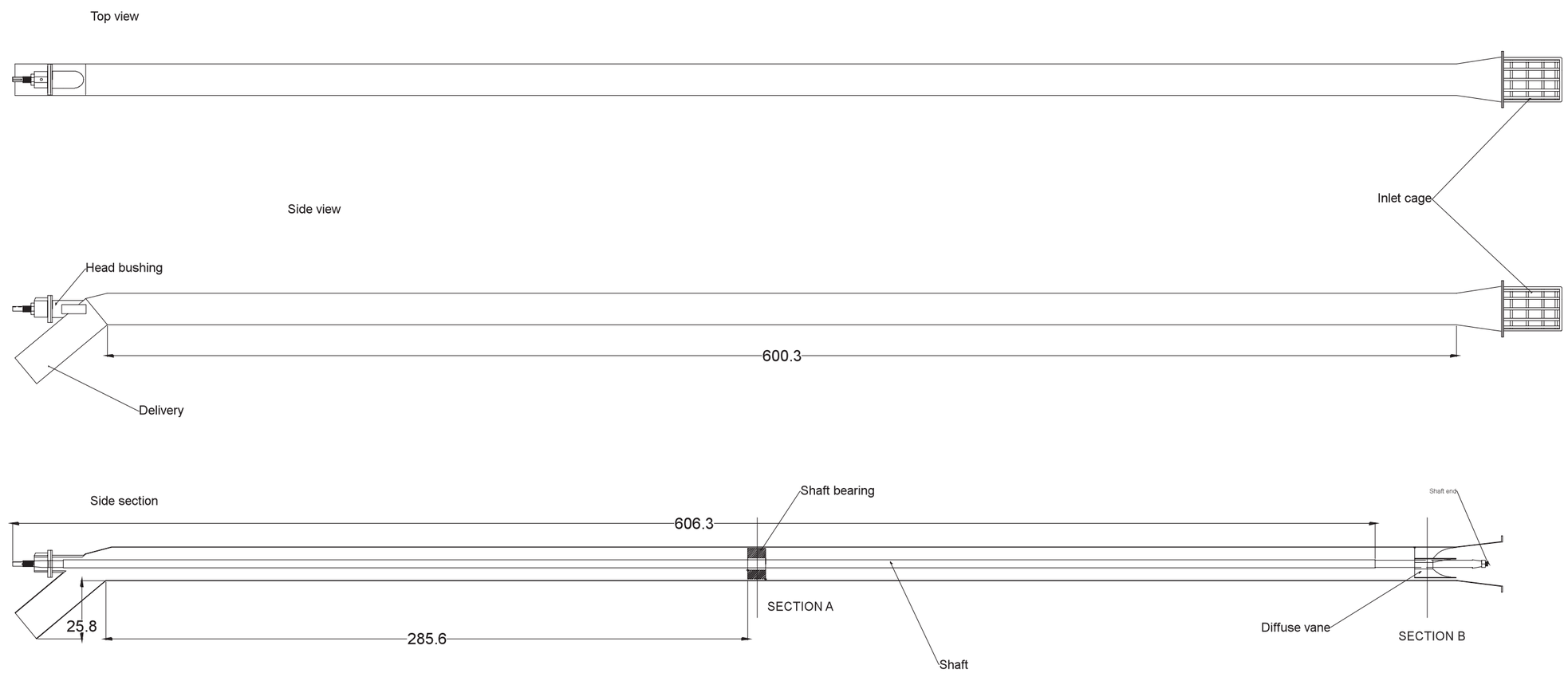

20 feet long; 6" diameter axial flow pump for low lift irrigation	Drawing #1
Top and side views. Side section.	
Scale 1:20 // Dimensions in cm (centimeters)	

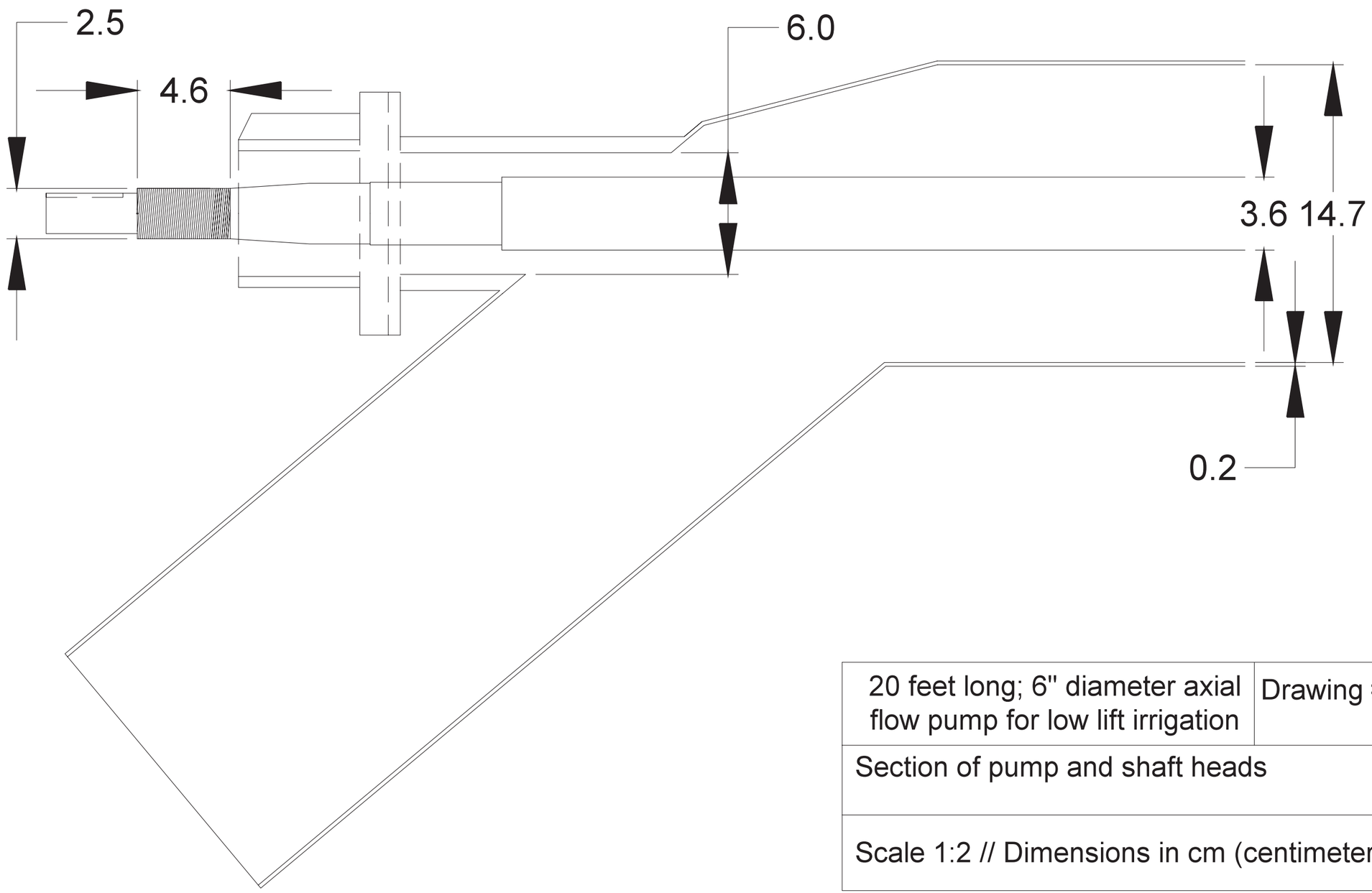

20 feet long; 6" diameter axial flow pump for low lift irrigation	Drawing #2
Section of pump and shaft heads	
Scale 1:2 // Dimensions in cm (centimeters)	

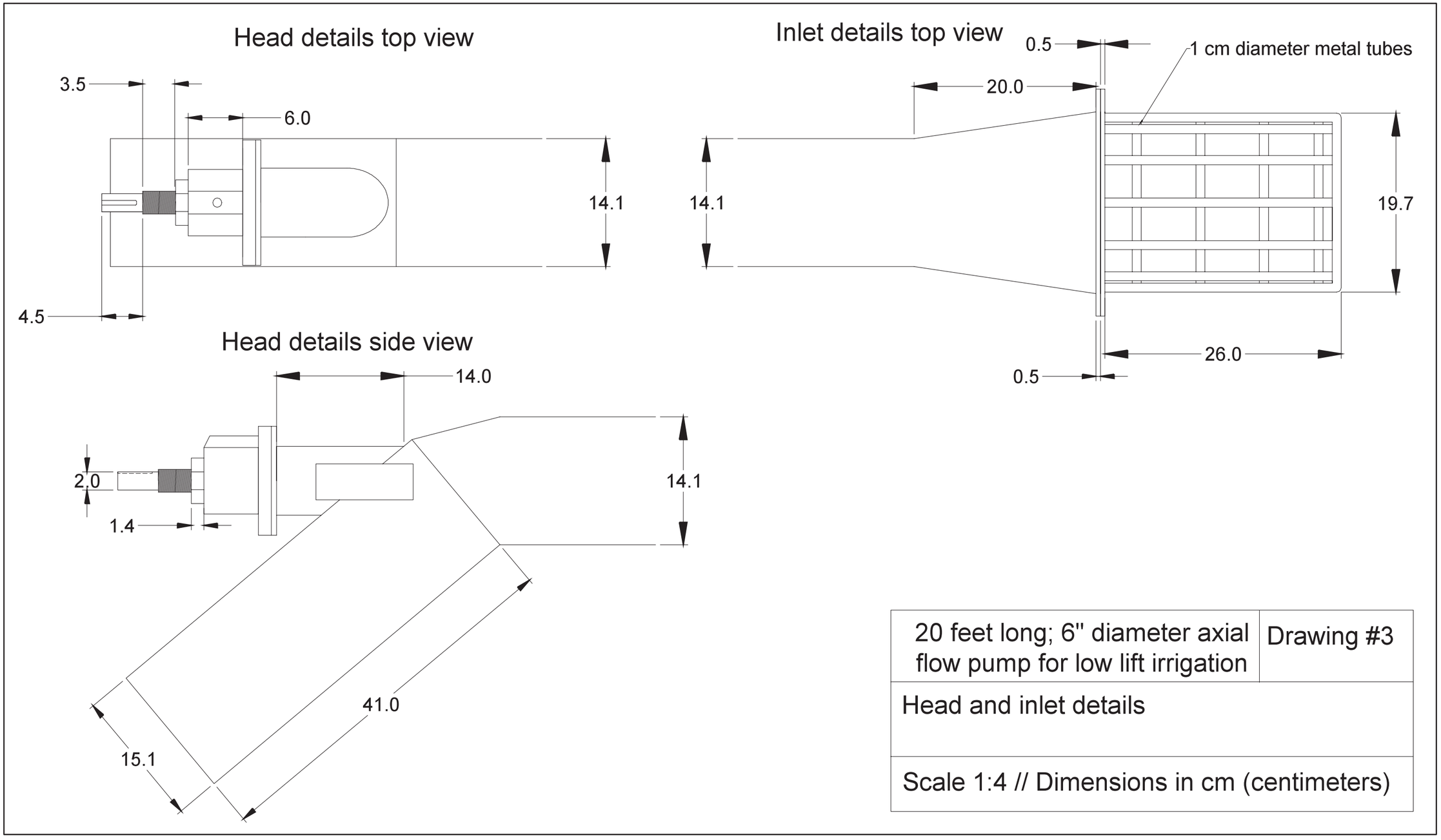
Head details top view
3.5
6.0
14.1
4.5
Head details side view
14.0
2.0
1.4
14.1
41.0
15.1
Inlet details top view
0.5
1 cm diameter metal tubes
20.0
14.1
19.7
26.0
0.5
20 feet long; 6" diameter axial flow pump for low lift irrigation
Drawing #3
Head and inlet details
Scale 1:4 // Dimensions in cm (centimeters)

SECTION A - Inner bearing for pump shaft

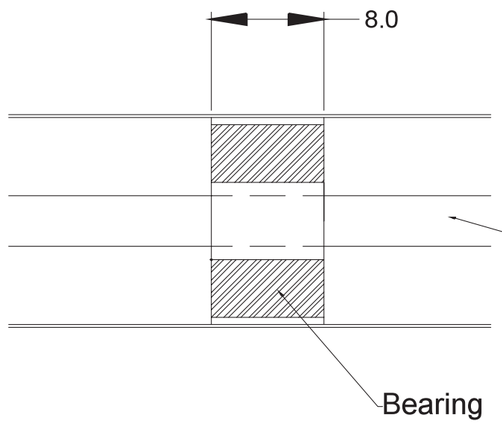

SECTION B - Diffusion vane for water flow

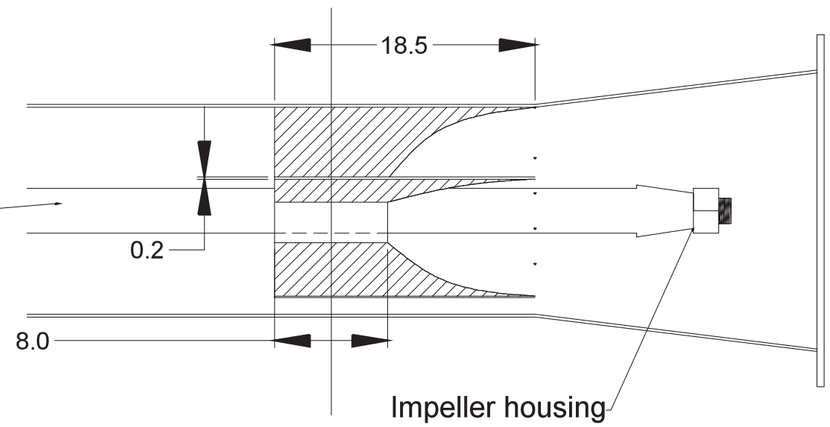

SECTION A - FRONT VIEW

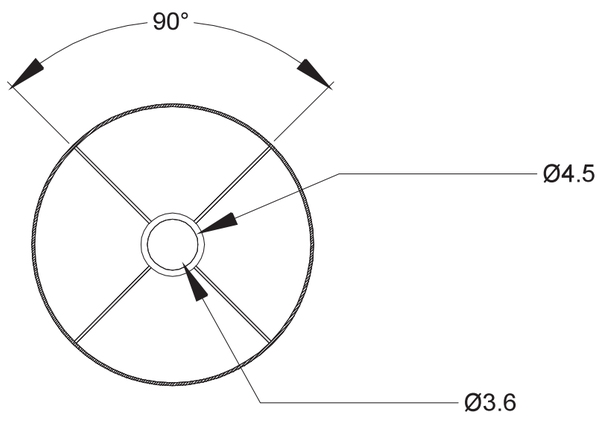

SECTION B - Front view

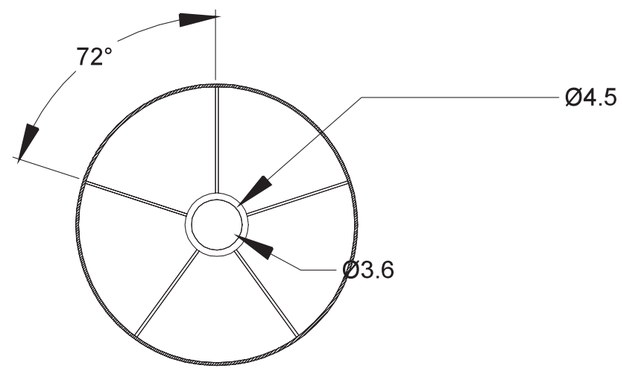

20 feet long; 6" diameter axial flow pump for low lift irrigation	Drawing # 4
Sections A and B. Section and side views	
Scale 1:4 // Dimensions in cm (centimeters)	

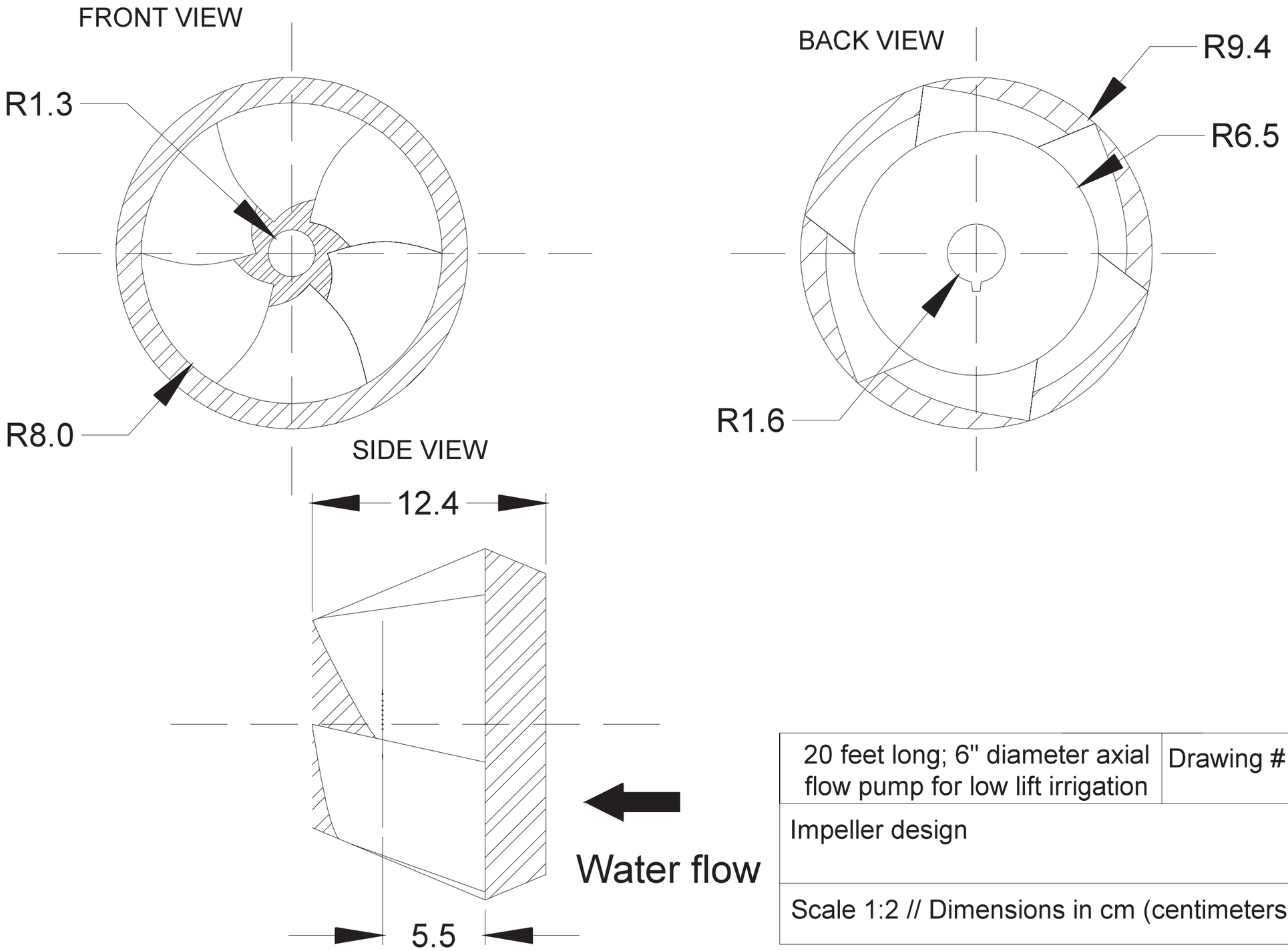

20 feet long; 6" diameter axial flow pump for low lift irrigation	Drawing # 5
Impeller design	
Scale 1:2 // Dimensions in cm (centimeters)	

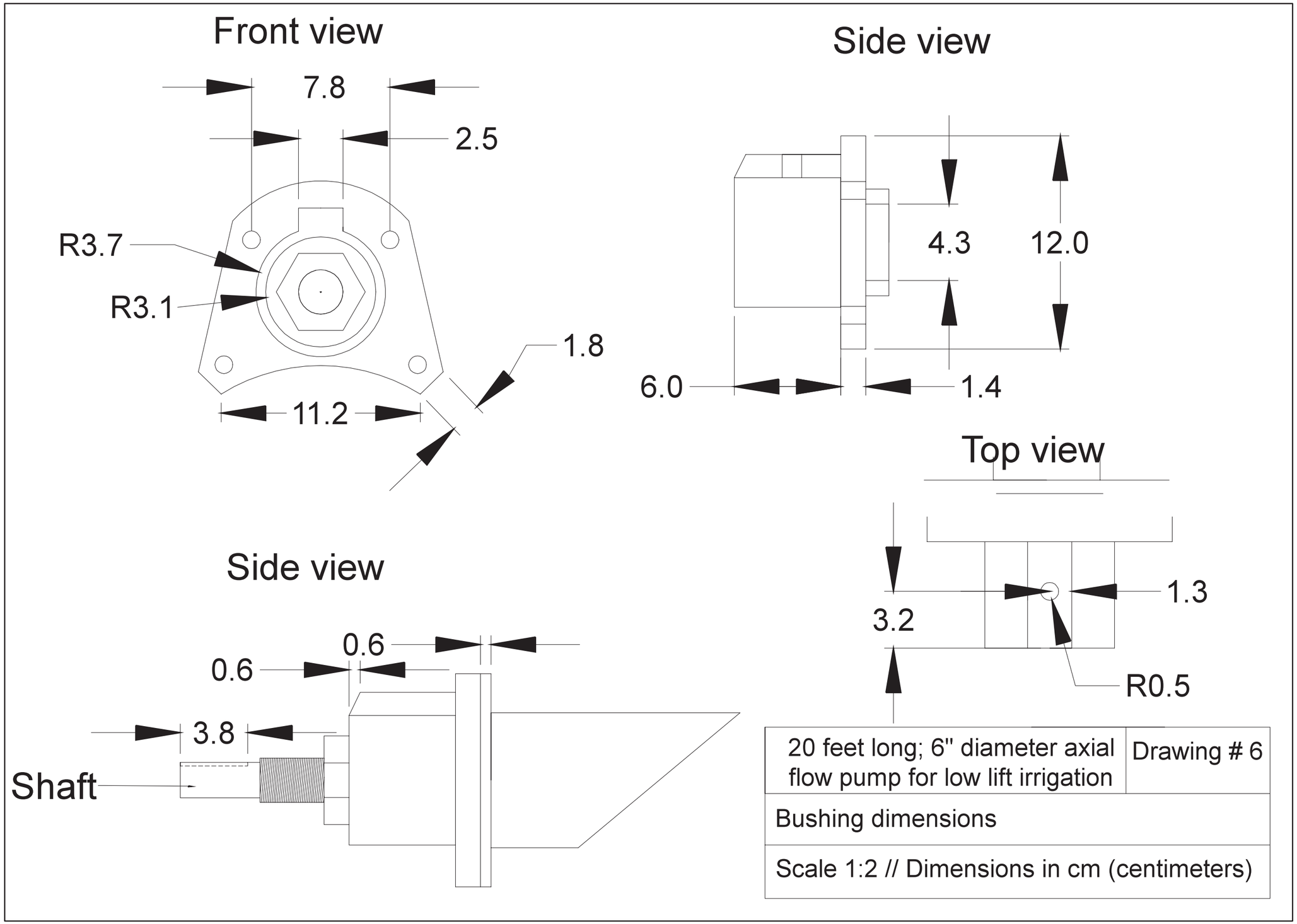
Front view
7.8
2.5
R3.7
R3.1
1.8
11.2
Side view
4.3
12.0
6.0
1.4
Top view
1.3
3.2
R0.5
Side view
0.6
0.6
3.8
Shaft
20 feet long; 6" diameter axial flow pump for low lift irrigation
Drawing # 6
Bushing dimensions
Scale 1:2 // Dimensions in cm (centimeters)

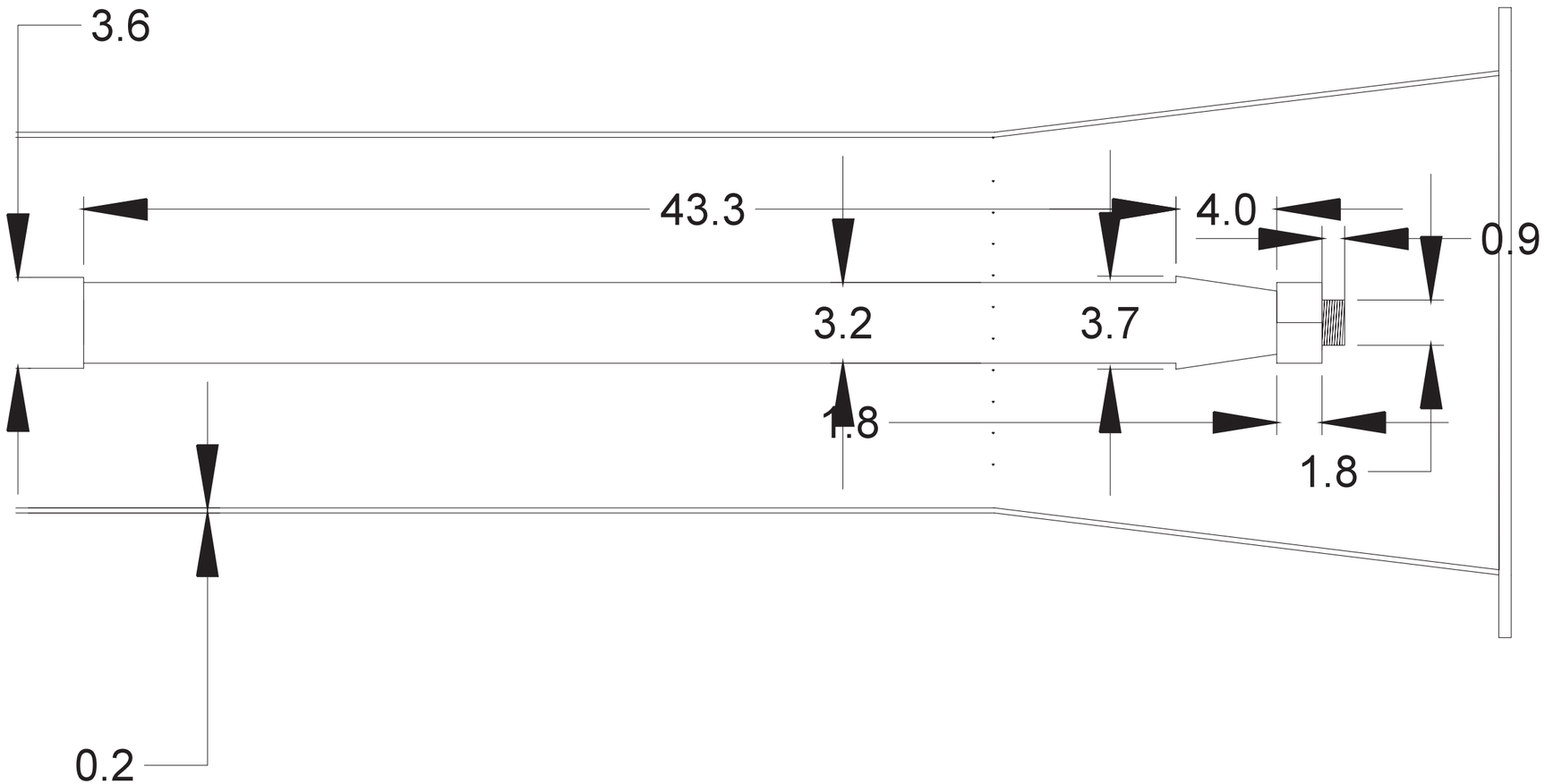

20 feet long; 6" diameter axial flow pump for low lift irrigation	Drawing # 7
Inlet section	
Scale 1:2 // Dimensions in cm (centimeters)	

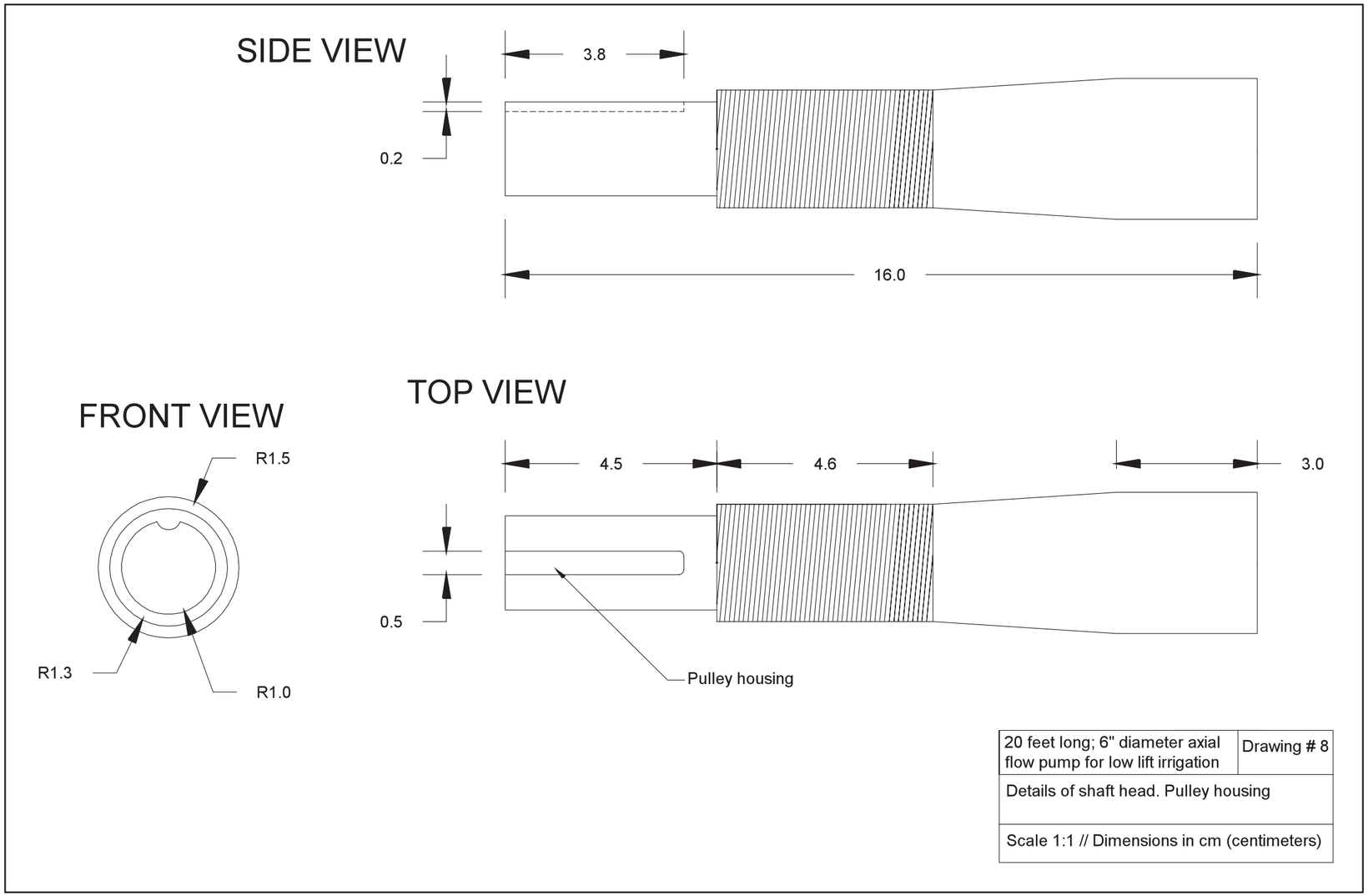
SIDE VIEW
3.8
0.2
16.0
TOP VIEW
FRONT VIEW
R1.5
R1.3
R1.0
4.5
4.6
3.0
0.5
Pulley housing
20 feet long; 6" diameter axial flow pump for low lift irrigation
Drawing # 8
Details of shaft head. Pulley housing
Scale 1:1 // Dimensions in cm (centimeters)

Photo: Santiago Santos Valle

CHAPTER 7

Improved blades and tines for seed drills used with two-wheel tractors in conservation agriculture

Improved blades and tines for seed drills used with two-wheel tractors in conservation agriculture

Proper crop establishment under direct drilling or CA with residue retention requires the appropriate implements to open the soil and place seed at the correct depth, spacing, and with the correct coverage of soil in the slot. Without the correct equipment for these operations, germination and the quality of the crop stand and plant population can be compromised. The implements used for these operations differ from those employed for conventional tillage. This chapter reviews the improved implements developed in Bangladesh that can be used to practice direct drilling or CA more effectively. We focus on improved blades (sometimes called knives) and tines (sometimes called openers) for use in ST and in ZT on flat fields or on beds, respectively.

Improved blades for strip tillage

ST is a method of establishing the crop by reducing the geometry and size of the field area tilled. When practiced with adequate residue retention and crop rotations, ST is considered a CA practice (see Chapter 5). Under this system, long and narrow strips of soil are opened and seed and often fertilizer placed within, leaving the space between the crop rows undisturbed. This can result in as much as a 25 percent reduction in the tilled surface of a field (Wysocki 1986; Celik and Altikat 2010), saving farmers time and fuel during crop establishment (Islam et al. 2010; Morrison 2002). ST reduces soil movement compared to full inversion or even shallow tillage, improving soil quality even in the medium-term, when practiced carefully (Al-Kaisi and Yin 2005). Though ST can be practiced with large, four-wheeled tractor machinery, in Bangladesh ST is usually practiced with seed-fertilizer drills that can be attached to two-wheeled tractors.

ST equipment should be modified according to the conditions of use. Most seed-fertilizer drills can be purchased commercially and modified for ST by removing blades from the rotovator shaft and aligning the remaining blades so that they create a narrow strip in front of the furrow opener. These machines usually come equipped with conventional J-shaped and wide-sweep blades (Figure 1), which are arranged with the curved part of the "J" pointed inwards towards the center of the tilled line. In light-textured or loamy soils, ST can usually be practiced using these factory-made blades

Photo: Arshadul Hoque

Figure 1. Conventional J-shaped, wide sweep blades commonly supplied with commercial models of seed-fertilizer drills or PTOS machines.

without much problem. When practiced on heavier clays or vertic soils (especially those with a high percentage of soil moisture), using J-shaped blades with wide sweeps can result in the blades 'picking up' and throwing soil behind the machine during ST. Under these conditions, soil that is re-deposited into the slot may become clodded, resulting in poor seed coverage, increased exposure to seed predation, loss of moisture from the slot itself, and high diurnal temperature fluctuations, all of which can result in poor germination and/or poor crop establishment.

Where soils are composed of a considerable percentage of clay or have vertic properties, and especially where soils are moist during land preparation and seeding, ST practitioners are advised to make use of alternative 'straight blade' implements with reduced sweep (Figure 2). The anterior length of such blades should be well-sharpened to cut into the soil effectively and to chop through surface residues, when ST is practiced as a CA technique. Farmers using ST in southern Bangladesh, where heavy clay soils can predominate, have already adopted the blades as shown in Figure 2. The improved ST blade has a measurably smaller sweep (40° angle and 2 cm long) than the conventional J-shaped blade (Figure 3; 80° and 5 cm long). This reduces the size of the soil clods created through ST under the conditions discussed above.

The blade is also slightly longer than the conventional J-shaped blade to increase the potential depth of seed placement and thus ensure seed being placed where soil moisture is ideal for germination; however, actual depth is controlled by adjustments made to the roller-bar at the terminal end of the seed-fertilizer drills.

Tines for conservation agriculture seed drills

As described above, farmers practicing the resource-conserving crop establishment techniques discussed in this book will require tools and implements that differ from those used for conventional tillage, seeding, and fertilizing. Of particular importance is the method by which the soil is opened following the passage of tillable blades. Common types of openers include concave disks, "blobblades," disk coulters, punch and powered types, and tine types (Murray et al. 2006). The former are common on large four-wheeled tractor implements, with the exception of emerging 2WT implements such as the Rogro-tined ZT seed drill developed in Australia (see Johansen et al. 2012). The two-wheeled tractors commonly used in Bangladesh and other Southeast Asian countries are currently set up so that a tine or "opener" is dragged behind the tillage blades, disks, or other implement used to loosen soil. The bottoms of the seed and fertilizer deposition tubes are placed into the top of the hollow opener, thereby allowing passage of inputs through the tube and opener and directly into the soil, following the opening of the furrow. In the case of the commercial implements widely available for rotary tillage that can be modified for strip tillage, openers are frequently wide and wedge or "shoe"-shaped, and may not be ideal for placing seed and fertilizer into narrowly-tilled slots. Some agricultural engineers or farmers might refer to these wedge-shaped openers as "shoes" or "hoes" (Figure 4; Murray et al. 2006). They are commonly attached to a 2WT-operated seeder and/or fertilizer drills (whether locally manufactured or imported from China).[1]

Photo: Santiago Santos Valle

Figure 2. Improved 'straight blade' design for strip tillage in heavy clay, vertic, or heavily moist soils.

Photo: Santiago Santos Valle

Photo: Arshadul Hoque

Figure 3. Comparison of angle sweeps on straight blades (left) and conventional blades (right).

1 The models of seeder-fertilizer drills commercially available from China that commonly have 'Wedge', 'Shoe,' or 'Hoe' type tines include the 2BFG-100 and the 2BFG-6A (Dongfeng Tractors) or the GN model from Sifeng tractors.

Photo: Timothy J. Krupnik

Figure 4. Example of wedge, shoe, or hoe type opener tines. Note the small length of adjustment on the shank. **1-** Female holder.

These openers are not recommended for reduced tillage operations (ST or ZT), because the movement of the wedge-shaped opener through a narrow furrow can actually push out and displace soil from the slot, resulting in poor seed coverage and moisture loss (Chaudhuri 2001). Moreover, seed and fertilizer placement depth cannot be adequately controlled when such furrow openers are used because the large, flat bottom edge of the opener exerts downward force that is met with resistance by the soil - especially on heavier clays or vertic soils - reducing downward penetration and causing the furrow opener to skid along the base of the furrow. In light-textured soils, however, this is not usually a problem. Hence, farmers are advised to choose the right implements for their field conditions. The same problems might arise when farmers attempt ZT, as wedge-shaped openers can push soil out of the slot even when simply dragged through the ground or following a pair of disks. Farmers wishing to practice ZT on top of pre-established beds, as in permanent raised bed systems, may also encounter similar problems.

In response to these potential problems, use of improved tine openers attached to the seed drill is one way to open the soil with reduced disturbance and results in less soil being pushed out of the slot. Using the right model of furrow opener can have several advantages, including: (1) placement of seed and fertilizer at the correct depth; (2) reduced forward-pulling traction; and consequently (3) a reduced power requirement and fuel consumption. Farmers attempting to establish crops on heavier soils are advised to use 'inverted-T' type furrow opener models. These models can easily be used with commonly available 2WT-based machinery. Inverted-T furrow openers gain their name from the shape of the opener itself, which resembles a T turned upside down (?). The tip of the opener is generally made of high-strength steel and the construction of the entire opener is markedly thinner than the wedge-shaped openers described above (Figure 5). The shank of the inverted-T opener is also generally longer than with the wedge- or hoe-shaped openers, allowing increased precision in seeding and fertilizing depth. The use of inverted-T openers has been reported to improve plant emergence and final plant stands under ZT conditions because this implement produces subsurface soil shattering that helps to maintain increased moisture levels in the furrow (Chaudhuri 2001). However, Murray et al. (2006) caution that they are not always ideal in clay soils, which can adhere to the opener and cause smearing of the furrow, although this is more likely to be a problem with ZT than with ST[2]. Nonetheless, use of inverted-T openers coupled with ST is increasingly common in Bangladesh, as they perform better than shoe or wedge types, are relatively simple to fabricate, and can be made in other countries.

Photo: Santiago Santos Valle

Figure 5. Example of an inverted-T shaped opener tine made in Bangladesh for use with two-wheeled tractors. Note the increased length of the shaft and tubes for merging with the seed and fertilizer drop tubes (left). Inverted-T openers are generally small in width and length (<3 cm wide), as shown on the prototype on the right.

2 Research is needed to confirm this hypothesis.

References

Al-Kaisi, M. M., Yin X.H. 2005. Tillage and crop residue effects on soil carbon and carbon dioxide emission in corn-soybean rotations. Journal of Environmental Quality. 34:437-445.

Celik, A. Altikat, S. 2010. Effects of various strip widths and tractor forward speeds in strip tillage on soil physical properties and yield on silage corn. Journal of Agricultural Sciences. 16:169-179.

Chaudhuri, D. 2001. Performance evaluation of various types of furrow openers on seed drills - A review. Journal of Agricultural Engineering Research. 79:125-137.

Islam, A. S., Haque, M., Hossain, M., Saleque, M., Bell, R. 2010. Water and fuel saving technologies?: Unpuddled bed and strip tillage for wet season rice cultivation in Bangladesh. Proceedings of the 19th World Congress of Soil Science, Soil Solutions for a Changing World. Brisbane, Australia. Pp. 169-172.

Johansen, C., Haque, M. E., Bell, R. W., Thierfelder, C., Esdaile, R. J. 2012. Conservation agriculture for small holder rainfed farming: Opportunities and constraints of new mechanized seeding systems. Field Crops Research. 13:18-32.

Morrison, J. E. 2002. Strip tillage for "no-till" row crop production. Applied Engineering in Agriculture. 18:277-284.

Murray, J. R., Tullberg, J. N. Basnet, B. B. 2006. Planters and their components: Types, attributes, functional requirements, classification and description. ACAIR Monograph No. 121. Canberra, Australia.

Wysocki, D. 1986. A strip-till planting system for no-till fallow. Pacific Northwest Conservation Tillage Handbook Series. Chapter 2. System and Equipment No: 3.

Photo: Santiago Santos Valle

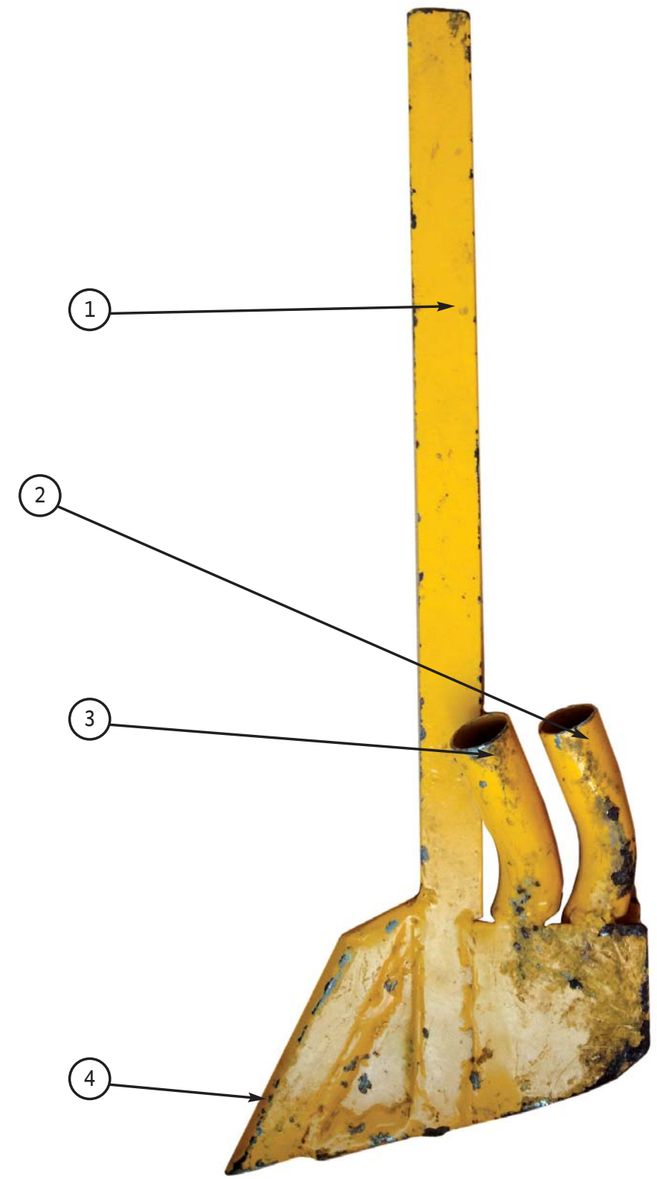

Photo: Santiago Santos Valle

Figure 6. Major components of improved furrow opener (left) and modified blade (right), for strip tillage:

1. support bar; **2.** fertilizer tube slot; **3.** seed tube slot; **4.** opening blade; **5.** blade body; **6.** blade hitch; and **7.** blade sweep.

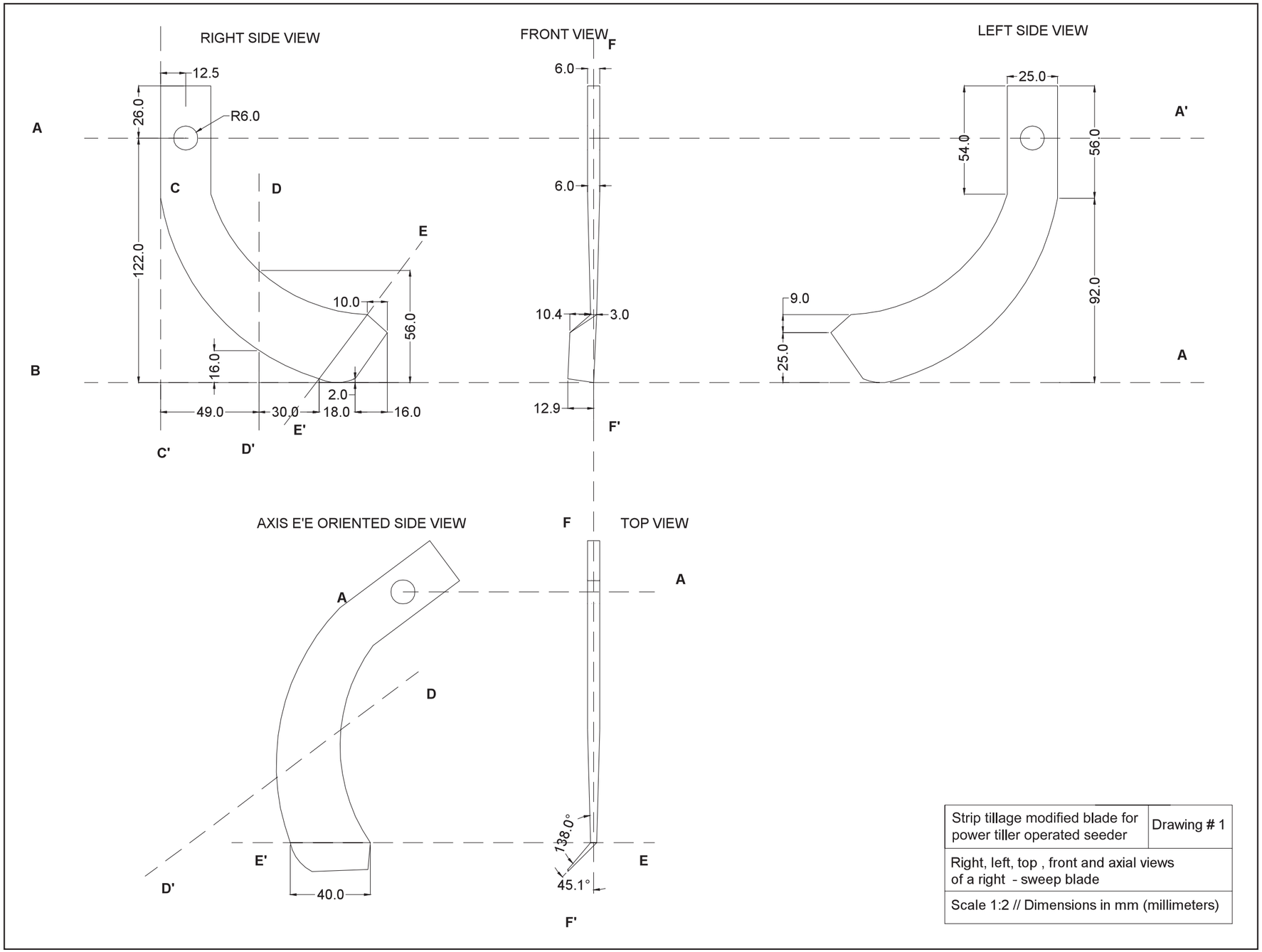
RIGHT SIDE VIEW
FRONT VIEW
LEFT SIDE VIEW
AXIS E'E ORIENTED SIDE VIEW
TOP VIEW
12.5
26.0
R6.0
122.0
10.0
56.0
16.0
2.0
49.0
30.0
18.0
16.0
6.0
6.0
10.4
3.0
12.9
25.0
54.0
56.0
9.0
25.0
92.0
138.0°
45.1°
40.0
A
A'
B
C
C'
D
D'
E
E'
F
F'
Strip tillage modified blade for power tiller operated seeder
Drawing # 1
Right, left, top , front and axial views of a right - sweep blade
Scale 1:2 // Dimensions in mm (millimeters)

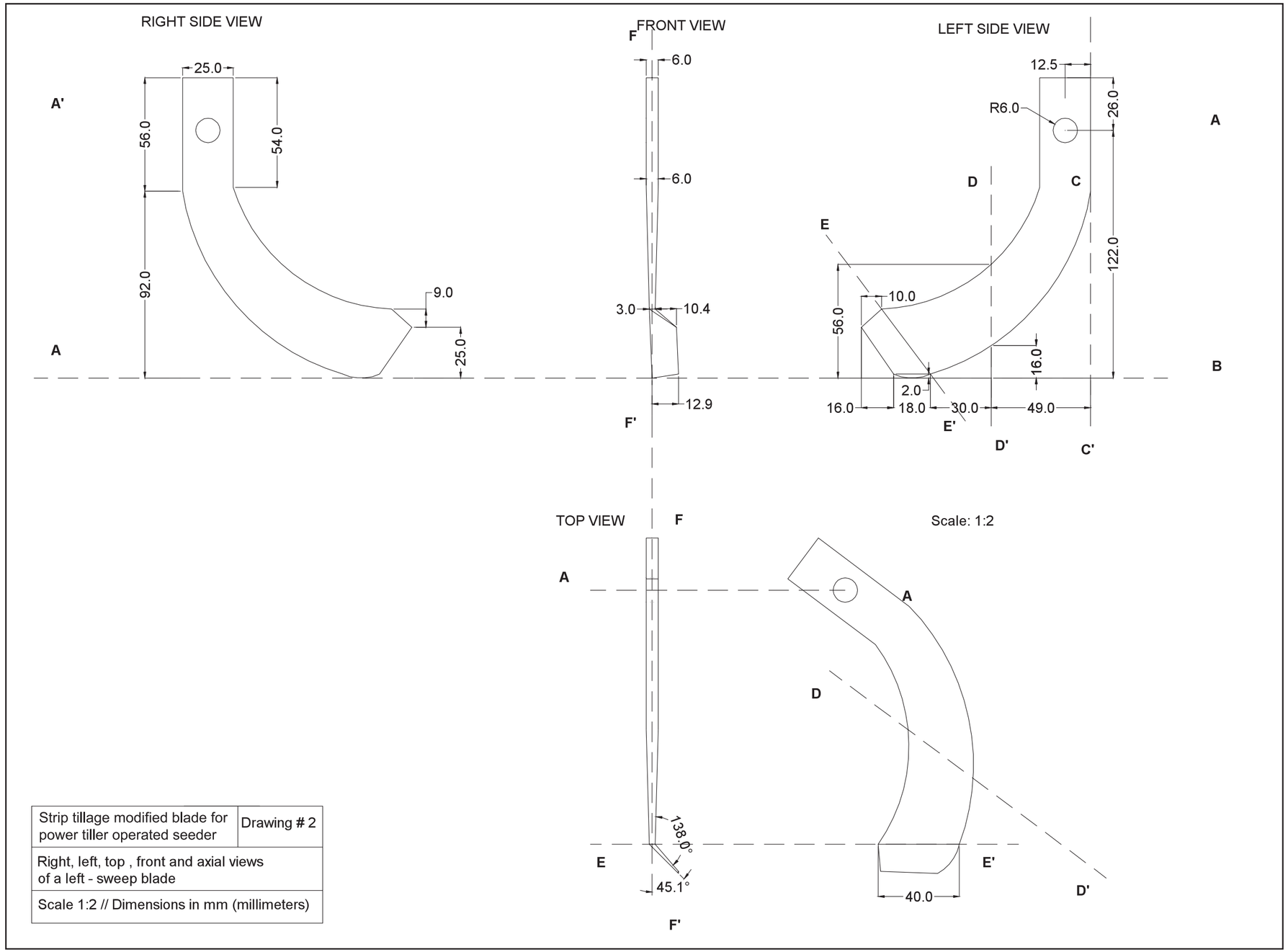

Strip tillage modified blade for power tiller operated seeder	Drawing # 2
Right, left, top , front and axial views of a left - sweep blade	
Scale 1:2 // Dimensions in mm (millimeters)	

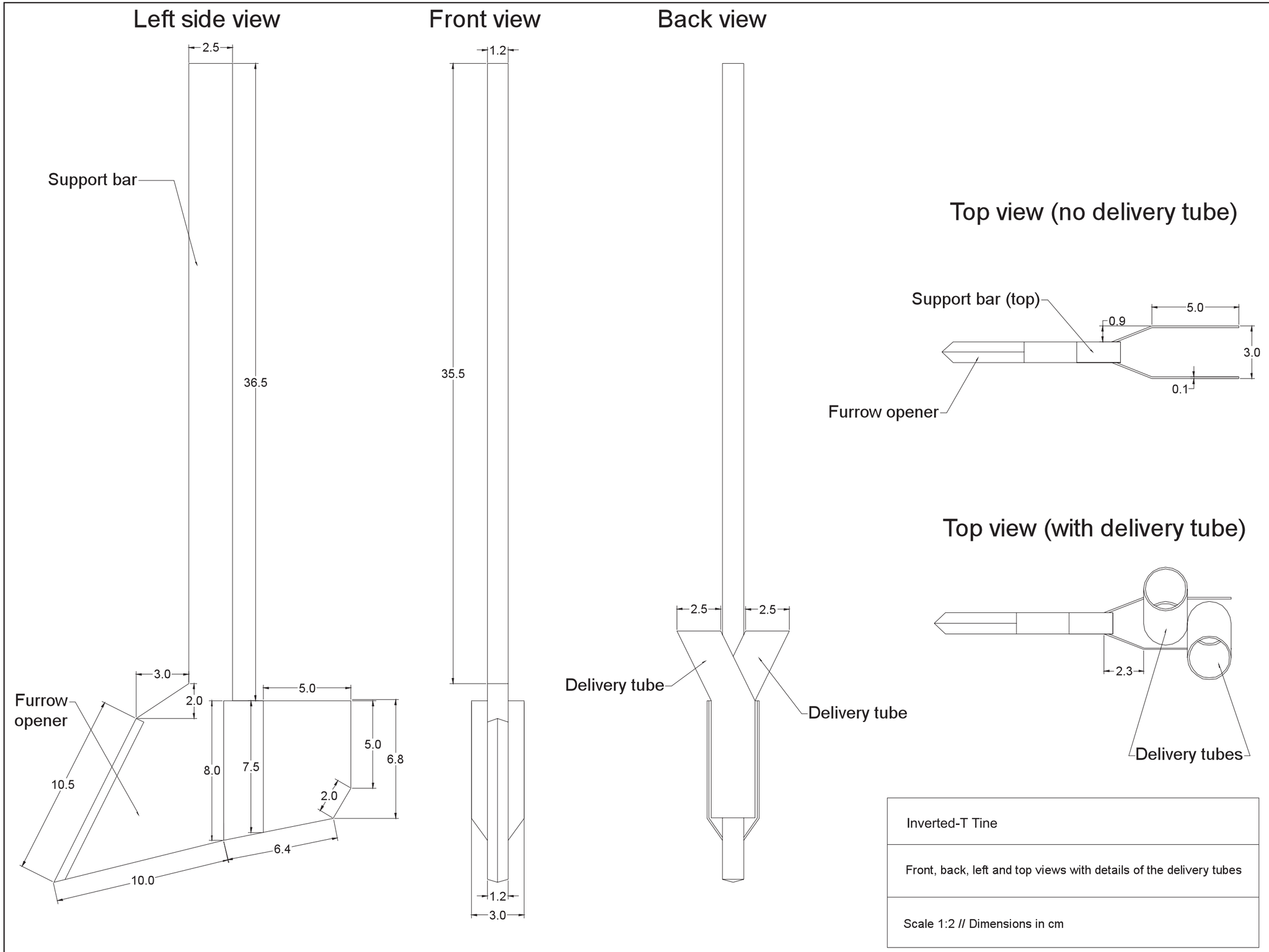

Inverted-T Tine
Front, back, left and top views with details of the delivery tubes
Scale 1:2 // Dimensions in cm

Photo: Santiago Santos Valle

CHAPTER

8

Fluted rollers for metering seed and fertilizer

Fluted rollers for metering seed and fertilizer

The metering device used to distribute seed and fertilizer into the soil is the most important component of a planting machine. Without effective seed placement and fertilizer metering, crop yield can suffer (Dabaghi et al. 2010). Fluted rollers are perhaps one of the most common methods of distributing seed and fertilizer while drilling cereal crops, and are becoming increasingly common for 2WT-planting attachments (Figure 1). Fluted roller meters can measure out seed of all sizes - from very large, like maize, to extremely small, like mustard or jute - at variable rates, underscoring their versatility (Esdaile et al. 2009). They utilize a gravity-fed volumetric metering system, consisting of a mechanized metered roller contained within a housing (Figure 2). The name "fluted roller" refers only to the individual part of the seed metering system that picks up and carries the seed or fertilizer from the storage box to the distribution tube. The housing that encases the fluted roller has an opening at the top, which connects to an outlet slot placed at the base of the seed or fertilizer boxes where the boxes and housing merge (Figure 3). This arrangement allows the flutes to capture seed or fertilizer as the roller moves forward (Meyer et al. 2010). Seed placement and consequent stand uniformity depend on several factors, including: (1) size, shape, and number of flutes on the roller; (2) size and accessibility of the housing opening in relation to the seed and fertilizer boxes; (3) the presence of a seed brush which is sometimes installed to assure that the correct amount of seed is captured by the rollers; (4) the method of seed transfer from discharging tubes to the furrow (Chapter 7); and (5) the forward travel speed of the tractor (Guler 2005). Adjustment of the amount of seed and fertilizer metered out is possible by changing the width of the roller exposed to receive seed at the inlets at the base of the seed and fertilizer boxes. On most 2WT models, this exposure can be manipulated because the rollers are fixed to a rotating axle bar that can be slid out and away from the holes in the seed box, exposing less of the flutes to seed or fertilizer, or inwards, allowing more material to be picked up for distribution into the soil.

The forward movement of the tractor therefore regulates the drop of seeds and fertilizer into the furrow via the distribution tube attached to the furrow opener. Quite often, the furrows are closed by a pair of press wheels placed behind the opener to assure improved soil coverage (Chapter 3 on ZT for an example). Closing the furrow is important to reduce seed predation by birds or rodents, while assuring optimal seed contact with moist soil to facilitate germination and rapid coleoptile expansion.

For reference, the key components of the fluted roller metering system are detailed below:

1. Seed and/or fertilizer boxes with exposed outlet holes on the bottom. The number of outlet holes depends on the type of tractor but is typically arranged at about 20 cm-spaced intervals. Actual seeding distance can be further manipulated by adjusting the horizontal position of the furrow openers that deposit seed and fertilizer into the soil.

Photo: Santiago Santos Valle

Figure 1. Side view of a strip till seeder-fertilizer drill mounted on a 2WT. Note the orange calibration knobs on the side of the seed and fertilizer boxes used to adjust the fluted rollers allowing the distribution of more or less material. The seed and fertilizer distribution tubes can be seen at the back of the tractor.

2. The fluted roller itself consists of a grooved cylinder, frequently made of high-density polyethylene plastic (HDPE), placed below the outlet holes and encased in a fluted roller holder (Figure 2). Different rollers have different flute types. The most common types look like a series of teeth or waves, and are ideal for small- and medium-sized seed. The number of teeth depends on the crop being planted and the required distribution of seed. In general, the larger the seed and spacing, the less teeth required. Some rollers have "cellular" flutes, which are a concave depression in the roller. These are generally better for larger seed types, though they may not always be able to capture and carry seed if it is not uniformly graded.

3. A rotating axle, connected via a transmission system (usually chains) that forces the roller to rotate forward with the movement of the tractor (Figure 3). The flutes on the roller pick up seed or fertilizer and carry it forward in a 180° top-to-bottom arc until it drops by force of gravity into the distribution tube.

4. A clutch that connects and disconnects the shaft over which the rotating cylinders that form part of the flute roller are mounted.

5. A sprocket and chain mechanism that acts as a transmission and forces the axle and rollers forward as a result of the movement of the tractor's wheel axles.

6. A calibration knob attached and locked to the roller axle that allows the user to extend or retract the exposure of the fluted rollers to the outlet holes in the seed and fertilizer boxes (Figure 4). The size of the outlet hole determines the quantity of seed and fertilizer carried forward.

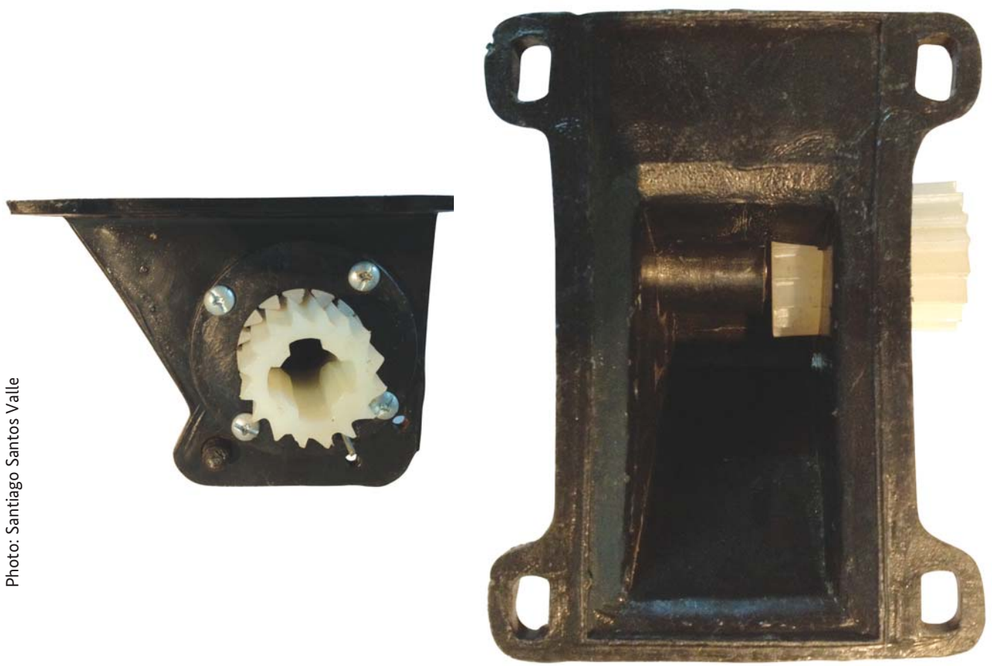

Photo: Santiago Santos Valle

Figure 2. Side (left) and top (right) view of the fluted roller (white cylinder) encased in housing (black plastic). As the tractor moves forward, the cylinder rotates and captures seed or fertilizer, eventually rotating it 180° from top to bottom, where the seed or fertilizer drops out of a hole at the bottom of the housing.

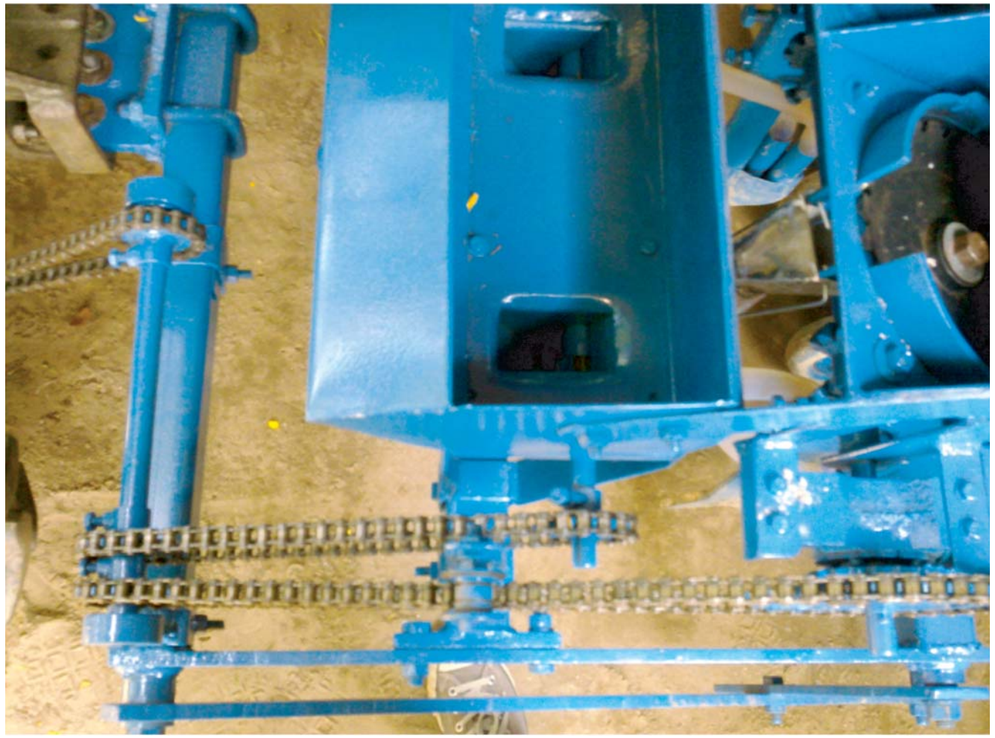

Photo: Santiago Santos Valle

Figure 3. Detail of the transmission of a fertilizer box with a flute roller metering system mounted in a ZT drill (note the fertilizer outlet holes in the bottom of the fertilizer box).

The fluted roller system of seed and fertilizer metering has been widely used in the following seeders for two-wheel tractors shown in this book:

- Six-row ST seeder-fertilizer drill (Chapter 5).
- ZT seeder (Chapter 3).
- PTOS.
- Bed planter (Chapter 4).

References

Dabaghi, A., Massah, J., Alizadeh, M. 2010. Effect of rotational speed and length of the fluted-roll seed metering device on the performance of pre-germinated paddy seeder unit. International Journal of Natural and Engineering Sciences. 4:7-11.

Esdaile, J., Bell, R. W., Hossain, M. I., Haque, M. E. 2009. Development of conservation farming implements for two-wheel tractors (power tillers) in Cambodia, Lao PDR and Bangladesh. Online: http://aciar.gov.au/publication/FR2010-20. Verified: June 22, 2012.

Guler, I. E. 2005. Effects of flute diamter, fluted roll length, and speed on alfalfa seed flow. Applied Engineering in Agriculture. 2:5-7.

Meyer, B. J., Felton, K. J. Graham, C. T. 2012. Volumetric metering system. EP 2329703 B1. Deere and Company. 2010. 12 June.

Photo: Santiago Santos Valle

Figure 4. Two examples of fluted rollers used for different seed sizes. The top roller is used for maize seeds and the bottom roller is used for multiple seeds, including small- and medium-sized cereals and pulses. Note that its aperture can be adapted to host bigger seeds.

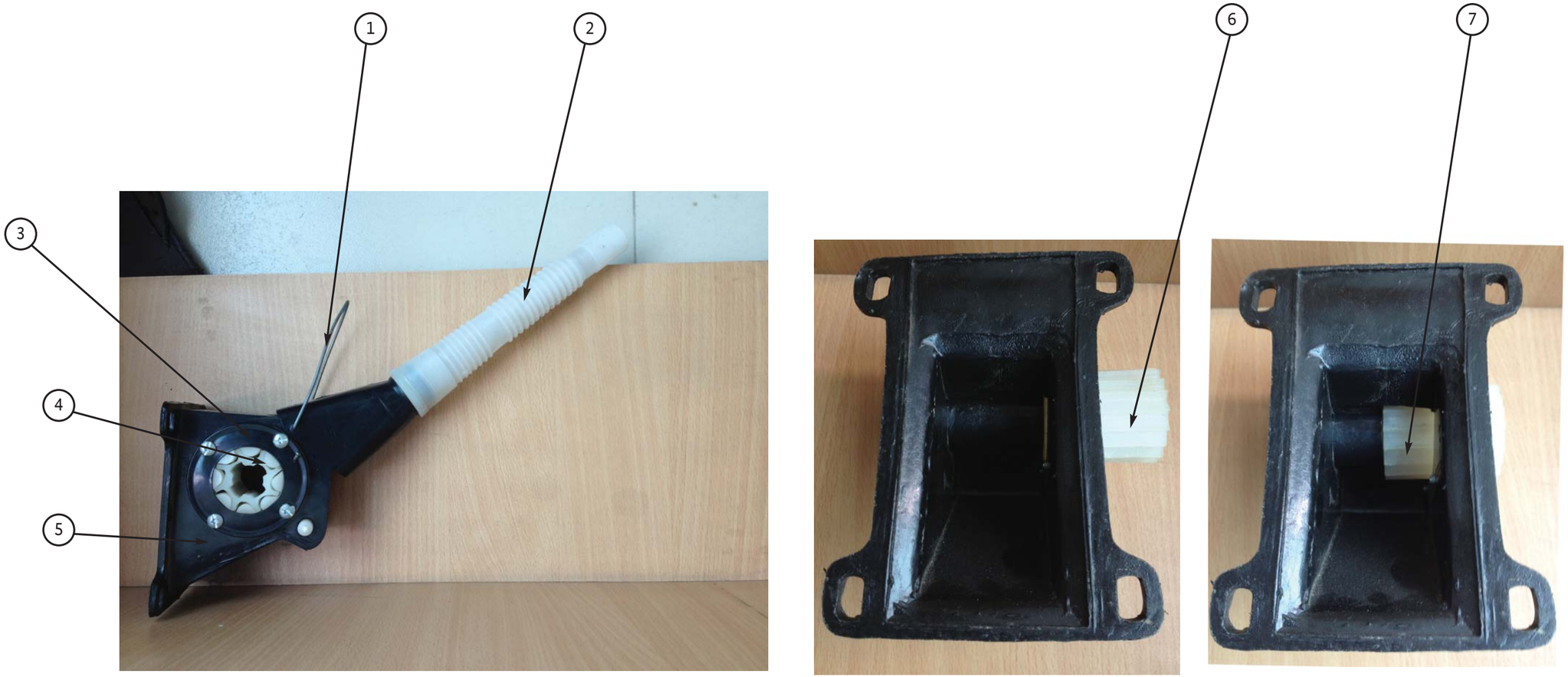

Photo: Santiago Santos Valle

Figure 5. Major components of fluted rollers: **1.** delivery tube hitch; **2.** delivery tube; **3.** roller casing; **4.** roller; **5.** seed or fertilizer bucket; **6.** roller is out in this position delivery is blocked; and **7.** roller is half extended this way; dose is controlled.

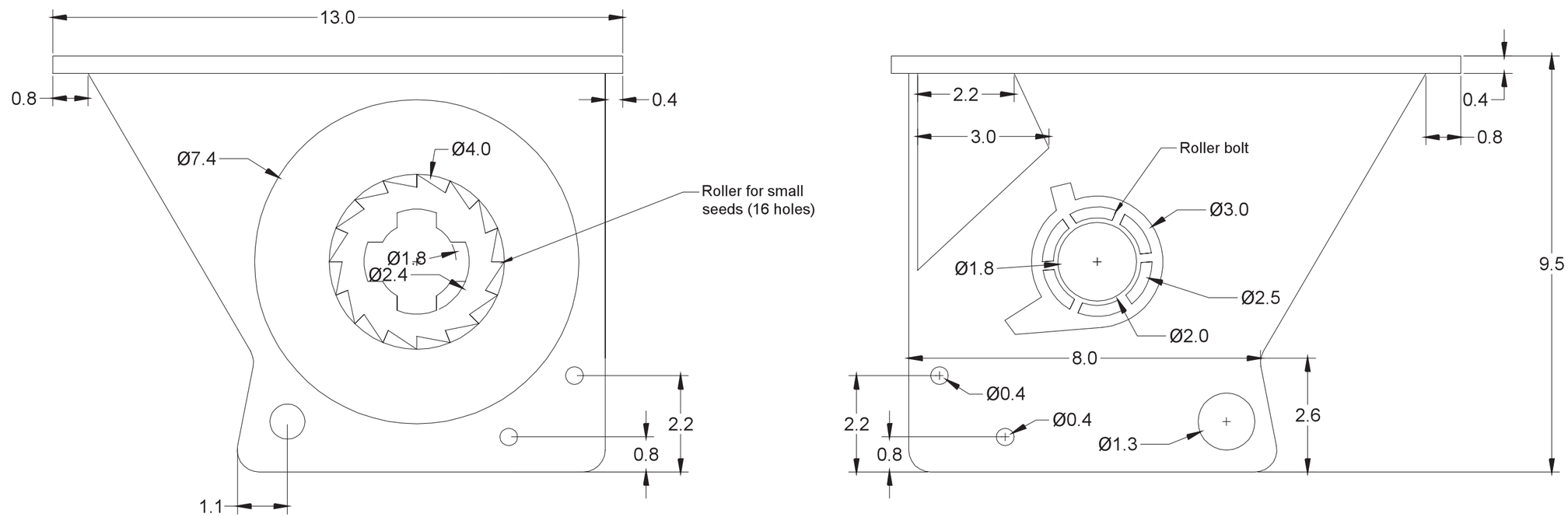

Fluted roller seed and fertilizer metering system	Drawing # 1
Left and right side views	
Scale 1:1 // Dimensions in cm (centimeters)	

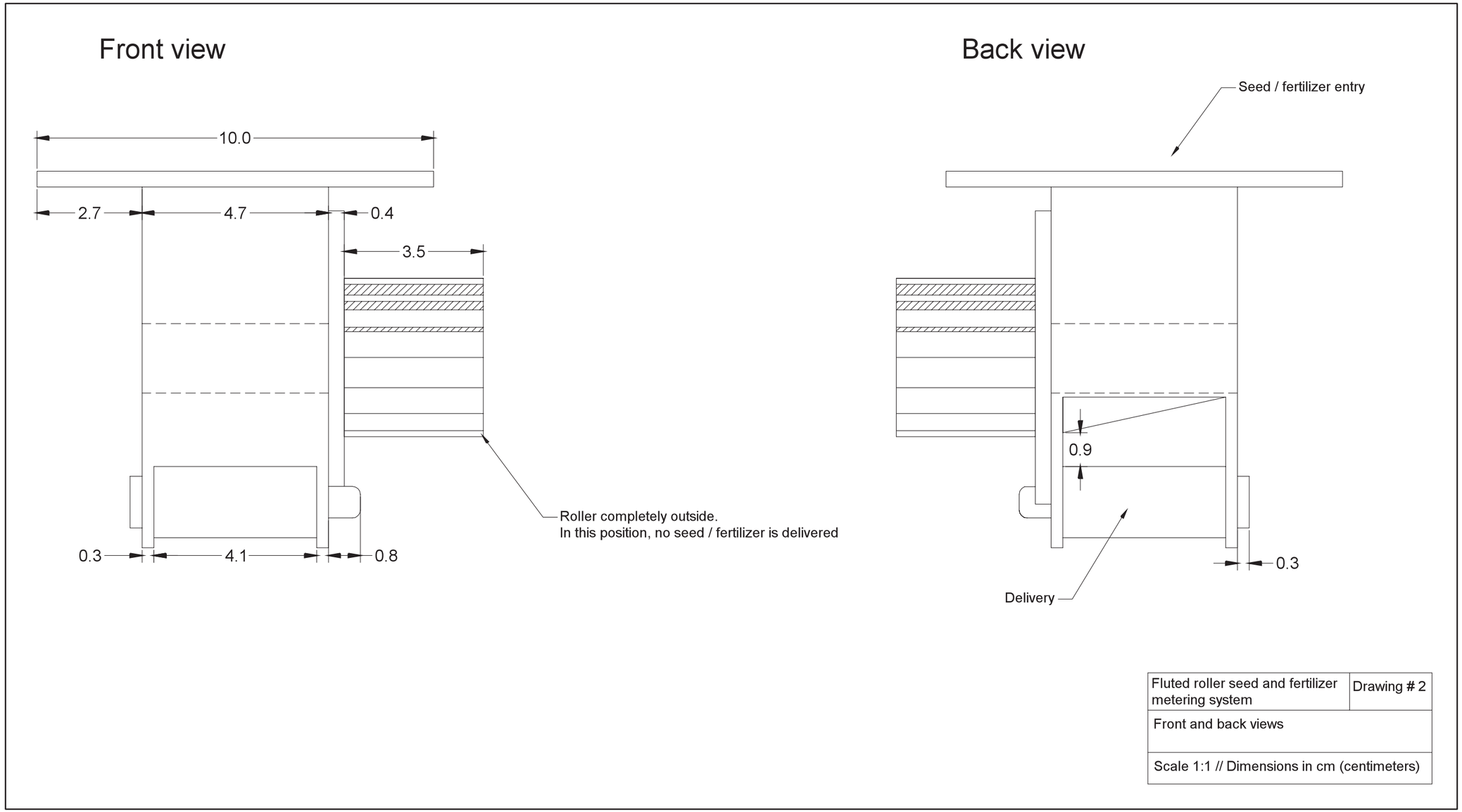
Front view
10.0
2.7
4.7
0.4
3.5
Roller completely outside.
In this position, no seed / fertilizer is delivered
0.3
4.1
0.8
Back view
Seed / fertilizer entry
0.9
0.3
Delivery
Fluted roller seed and fertilizer metering system
Drawing # 2
Front and back views
Scale 1:1 // Dimensions in cm (centimeters)

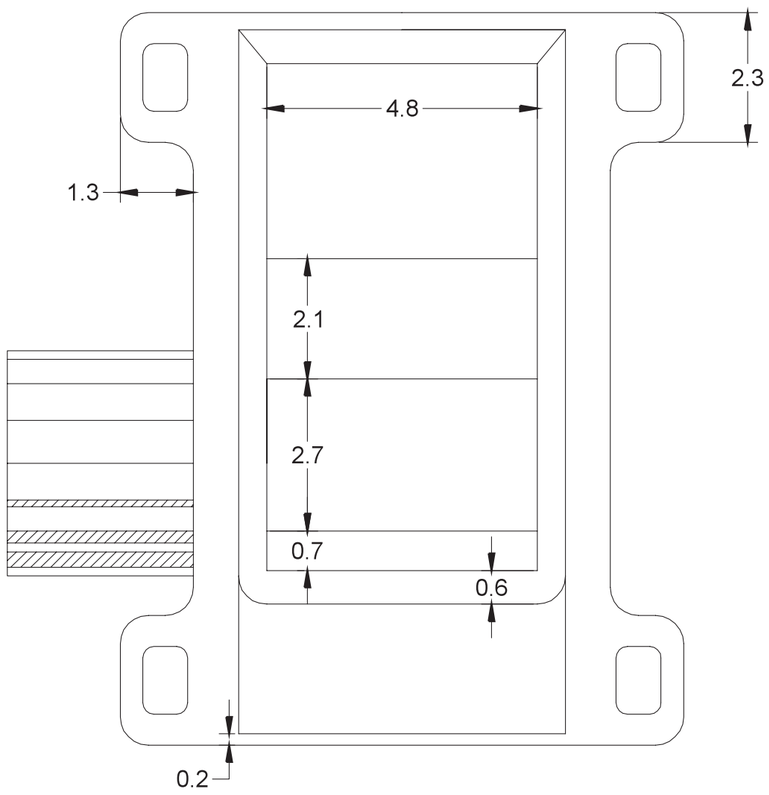

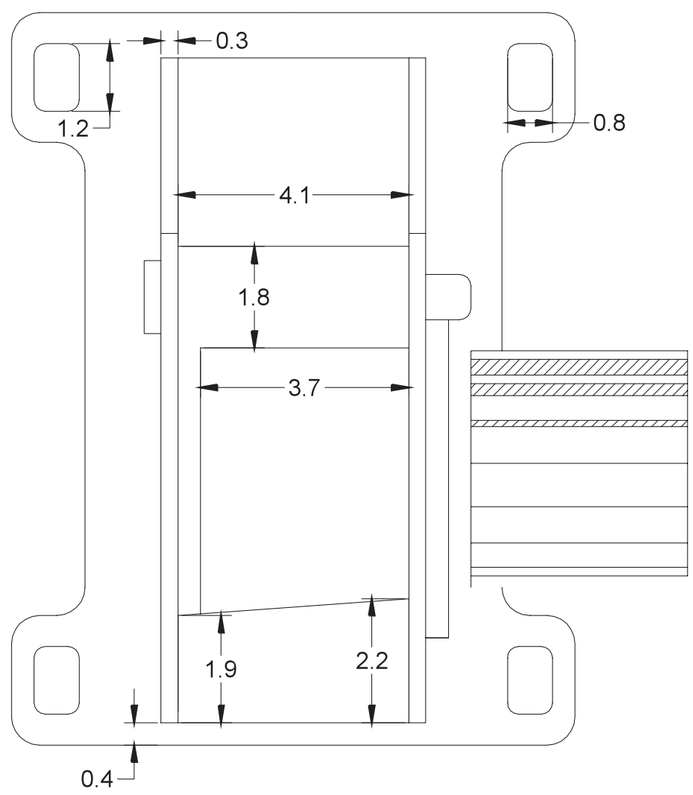

Fluted roller seed and fertilizer metering system	Drawing # 3
Top and bottom views	
Scale 1:1 // Dimensions in cm (centimeters)	

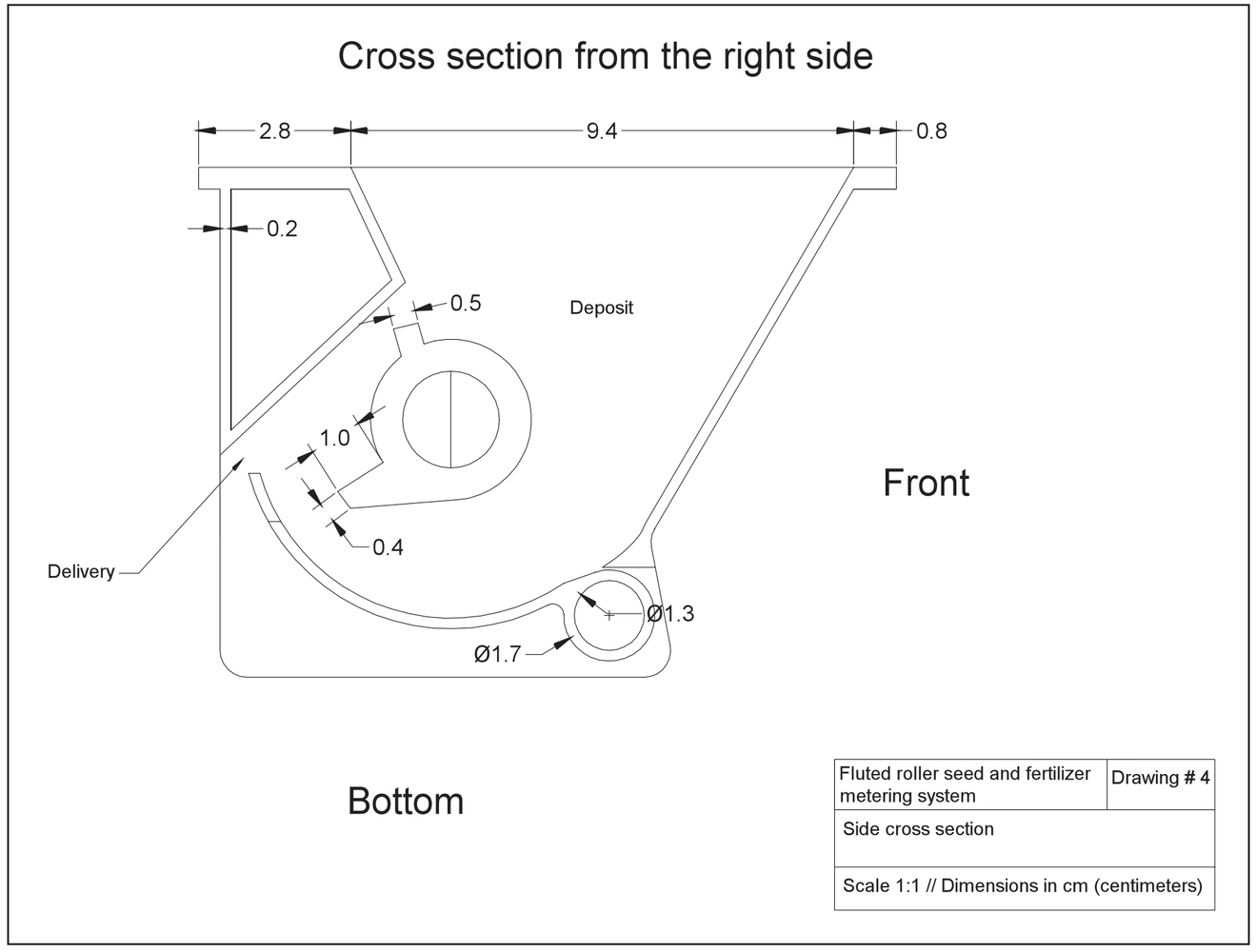
Cross section from the right side
2.8
9.4
0.8
0.2
0.5
Deposit
1.0
0.4
Delivery
Ø1.3
Ø1.7
Front
Bottom
Fluted roller seed and fertilizer metering system
Drawing # 4
Side cross section
Scale 1:1 // Dimensions in cm (centimeters)

Photo: Timothy J. Krupnik

CHAPTER

9

Inclined plate seed metering system

Inclined plate seed metering system

In direct seeding systems, which include but are not exclusive to CA-based crop management, properly metered seed placement, plant spacing, and subsequent crop establishment are critical for rapid early growth, the optimization of soil nutrient and water resources, and enhanced crop competitiveness with weeds, all of which contribute to yield. While fluted rollers are perhaps the most common mechanized seed metering system globally, inclined plate systems are gaining popularity. This is due to the increased precision with which farmers can plant larger seeds like maize, while facilitating good establishment for medium-sized seeds like wheat or rice. Inclined plates pick up seeds from the seed box, carry them forward and drop them in precise quantities through a tube and furrow opener into the soil (Figure 1). The geometry of seed placement is directly related to the speed at which the tractor moves forward (Murray et al. 2006) and is regulated by the number of 'teeth' drilled into the plate (Figure 1). The term 'inclined plate' refers to the slope of the plate, which can be adjusted (from nearly horizontal to nearly vertical), on some machines to optimize the plate's ability to pick up and carry seed of different sizes and shapes.

The inclined plate seed metering system consists of the following parts: (1) a concave, bowl-shaped mold into which the plate is placed and bolted into position. The mold is usually made of plastic for two-wheeled tractors or metal on four-wheeled tractors. The bottom of the mold is a hollow space through which a bolt attached to a sprocket (see below) protrudes, which moves the plate in a clockwise motion. Other components include: (2) a seed plate (Figure 2); (3) a double sprocket system joined to a rotating axle-shaft (Figure 3); and (4) chains used to transmit power to the axle from the forward movement of the tractor's wheels (Figure 4). Components 1 and 2 are both placed inside the seed box. Multiple inclined plates, and thus rows of crop seeded, are possible (Figure 5). The clockwise spinning of the plate originates with the sprockets mounted on an axle-shaft (Figure 1), which takes power either from an attachment at the hub of the tractor's wheel or from the tractor transmission (Figure 4). Inclined plates can be manufactured with different materials, each of which has pros and cons. Aluminum plates are more precise but are more expensive, whereas methacrylate or polyethylene plates are inexpensive, but less precise and prone to problems with clogging and warping if left in the sun for extended periods. Well-designed metering systems can include a seed brush to assure that seed is knocked out the plate's teeth into the seed distribution tube and furrow opener (Chapter 12).

The seed rate can be adjusted by interchanging plates with those that have different numbers of teeth and teeth geometry, depending on the crop being planted (Baker et al. 2007). Because the plates are designed to carry seed of a particular shape and size, the seed used when drilling should be carefully selected for optimal performance (Murray et al. 2006). In Bangladesh, inclined plate metering systems have been used for ZT drills (Chapter 2), bed planters (Chapter 3), and ST seeders, which are sometimes referred to as PTOS (Chapter 4). In the case of bed planters used for maize, the use of inclined plate seeding systems has been quite successful. Seeding operations were cheaper and the number of grains per panicle were higher in bed-planted plots compared to conventional seeding methods (Hossain et al. 2010).

Photo: Santiago Santos Valle

Figure 1. Detail of an aluminum inclined plate showing the teeth arrangement and optimal size for maize seed planting.

Photo: Santiago Santos Valle

Figure 2. Plastic inclined plate for maize planting mounted on its holder.

Photo: Santiago Santos Valle

Figure 3. The double sprocket system that forces the movement of the plates in a clockwise motion. Sprockets are mounted on a shaft that takes power either from a ground wheel or the tractor transmission.

Photo: Santiago Santos Valle

Figure 4. Transmission system for the inclined plate seeder on a 2WT-mounted ST machine.

References

Baker, C. J., Saxton, K. E., Ritchie, W. R., Chamen, W. C. T., Reicosky, D. C., Ribeiro, F., Justice, S. E., Hobbs, P. R. 2007. No-tillage Seeding in Conservation Agriculture., 2nd Edition. Cabi, Rome.

Hossain, M. I., Islam, M. S., Hossain, I., Meisner, C. A., Rahman, M. Sq. 2010. Seeding performance of two wheel tractor operated bed planter for cereal crop establishment.

Murray, J. R., Tullberg, J. N., Basnet, B. B. 2006. Planters and their components: types, attributes, functional requirements, classification and description. The University of Queensland and Australian Centre for International Agricultural Research Monograph No. 121. Canberra, Australia.

Photo: Santiago Santos Valle

Figure 5. PTOS prepared for ST seeding of wheat in six 20 cm-spaced rows and six inclined plates.

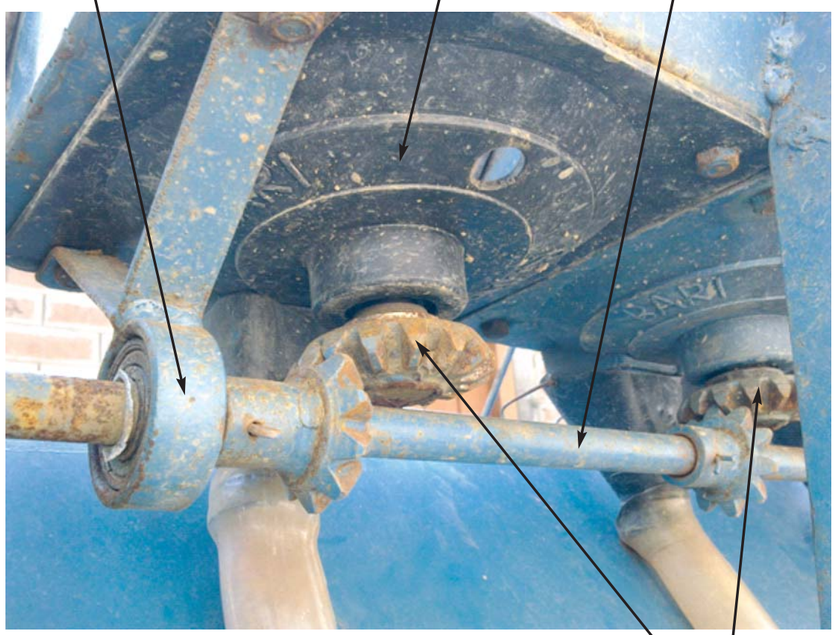

Photo: Santiago Santos Valle

Photo: Santiago Santos Valle

Figure 6. Major components of an incline plate: **1.** transmission axle support; **2.** plate holder; **3.** transmission axle; **4.** sprockets that turn plates; **5.** seed deposit; 6. slot for seed flow into plate; **7.** plate; and **8.** plate holder.

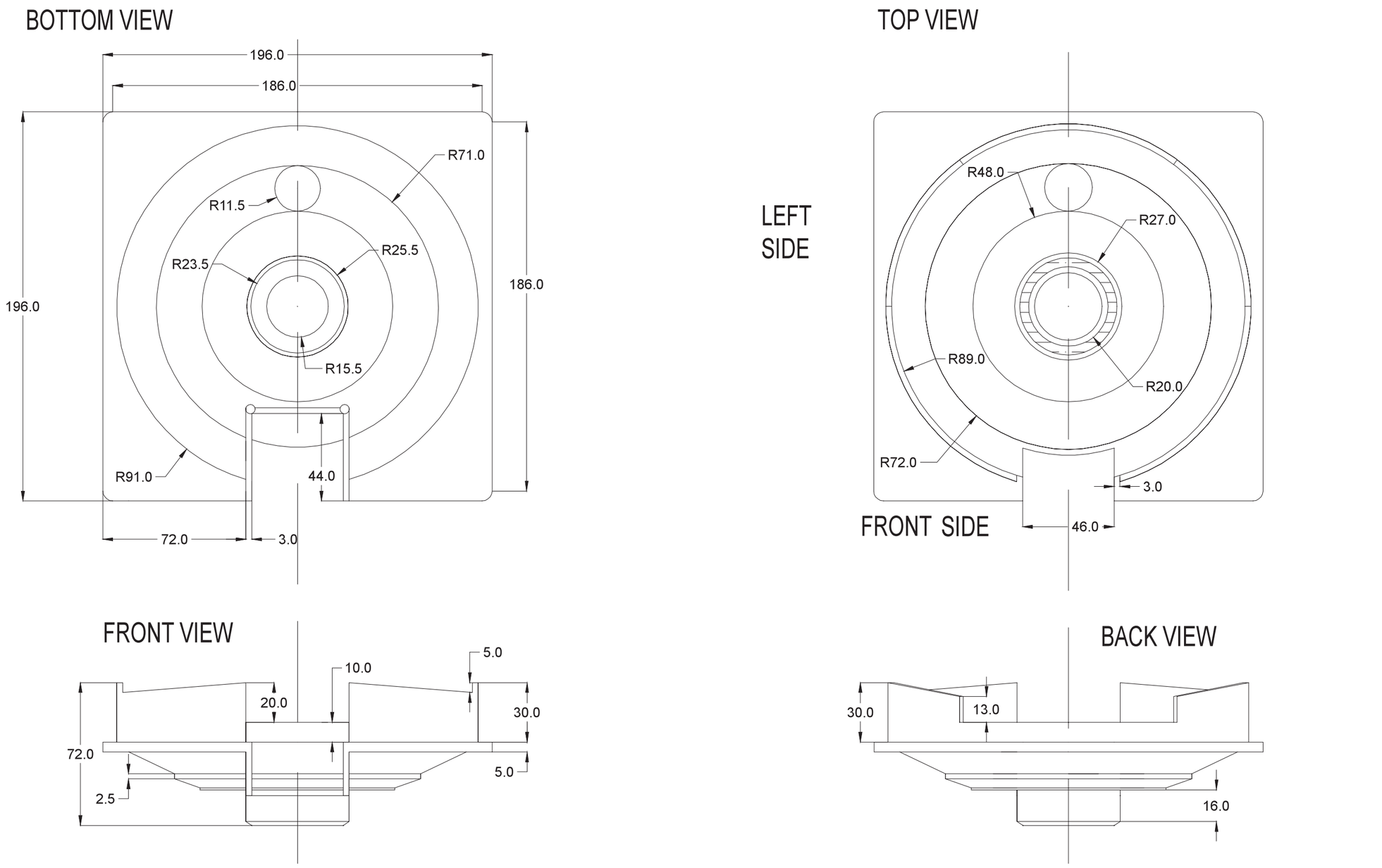

Inclined plate seed metering system	Drawing # 1
Top, bottom, front and back views	
Scale 1:2 // Dimensions in mm (millimeters)	

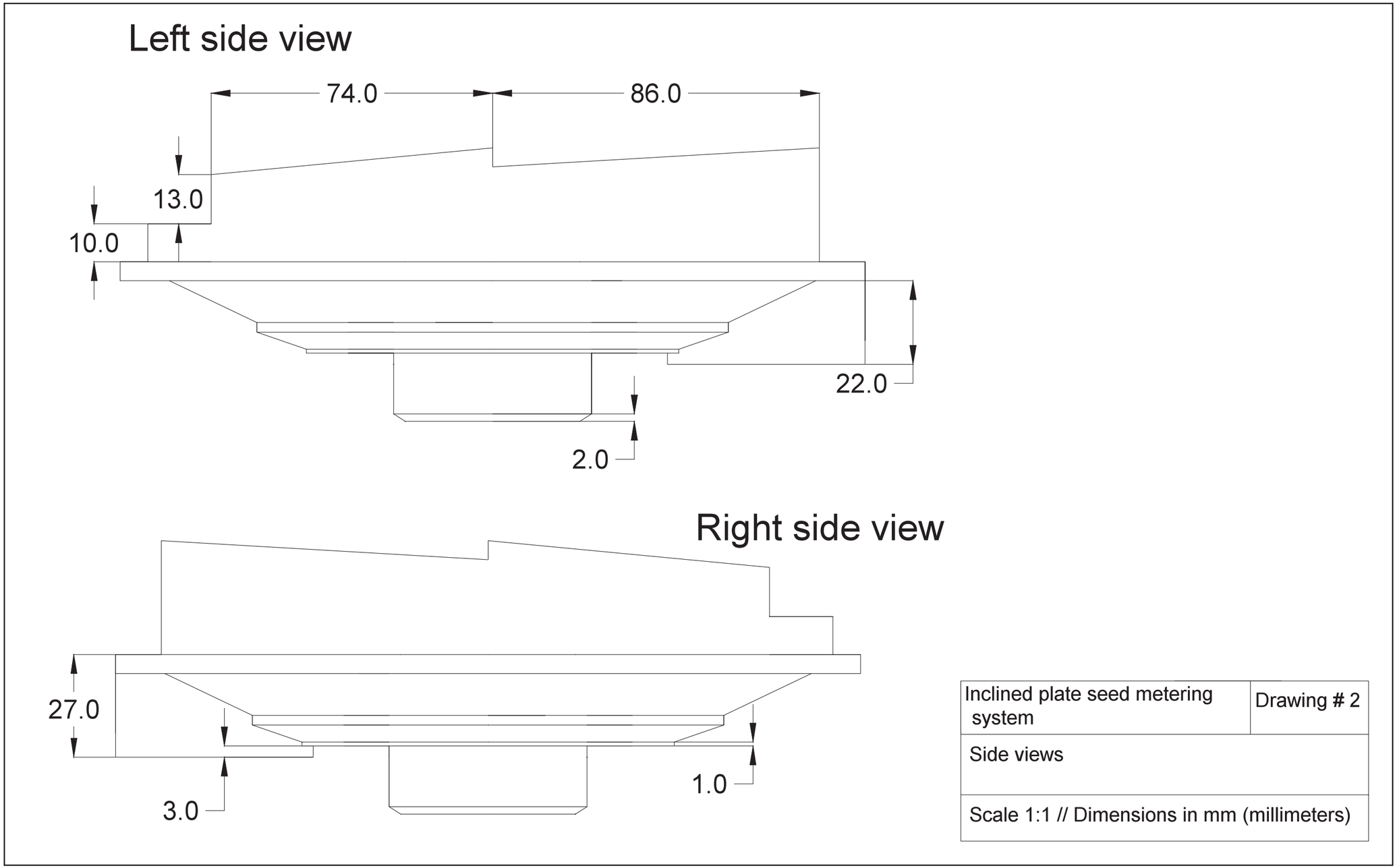
Left side view
74.0
86.0
13.0
10.0
22.0
2.0
Right side view
27.0
3.0
1.0
Inclined plate seed metering system
Drawing # 2
Side views
Scale 1:1 // Dimensions in mm (millimeters)

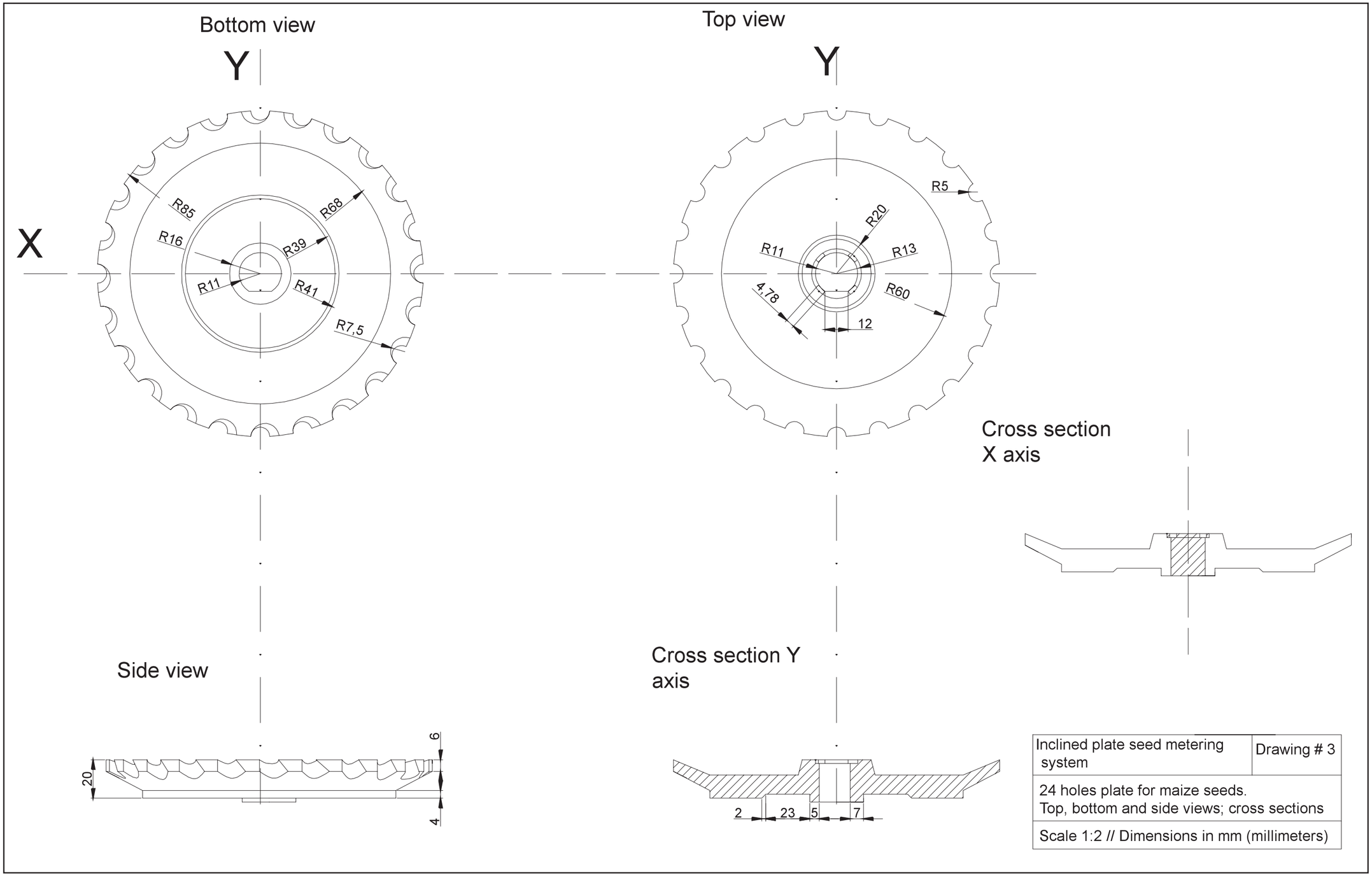
Bottom view
Top view
Y
Y
X
R85
R68
R16
R39
R11
R41
R7,5
R5
R20
R11
R13
4,78
R60
12
Cross section
X axis
Side view
Cross section Y
axis
20
6
4
2
23
5
7
Inclined plate seed metering system
Drawing # 3
24 holes plate for maize seeds.
Top, bottom and side views; cross sections
Scale 1:2 // Dimensions in mm (millimeters)

Photo: Timothy J. Krupnik

CHAPTER

10

Introduction to technical designs for agricultural machinery manufacturers: A learning module

Introduction to technical designs for agricultural machinery manufacturers: A learning module

This chapter is intended to move from theory to practice. This book has presented numerous technical designs that can enable machinery manufacturers to make small-scale, appropriate, and resource- conserving agricultural machinery for planting and crop management operations. However, a number of the designs are complicated. If this book is to be used as a tool for extending these designs so that they can be acted upon and so manufacturers can actually build machines from the bottom up, a nuanced understanding of how to utilize this information is necessary.

This chapter provides a learning module - basic teaching curricula for a training program that can be utilized, built-upon, or modified so that the basics of how to use technical designs for building machines can be easily explained and so that manufacturers, NGOs, extension workers, and other clientele can use them in practice. For education to be effective, adults require hands-on, experiential learning rather than lecture-based teaching formats (Kolb 1984). This is particularly the case with technical information such as that in this book. In many developing countries, the realization of the need for experiential learning drove much of the participatory learning and farmer-centered approaches in agricultural development (Pretty 1995), resulting in the broad-scale implementation of farmer field schools and other hands-on learning approaches to extension and farmer experimentation that have been widely implemented in Africa and Asia (van den Berg and Jiggins 2007; Krupnik et al. 2012; Settle and Garba 2011). For examples of other modular learning formats utilized in agricultural extension activities and examples of comprehensive, farmer-centered educational curricula, readers are encouraged to consult Defoer et al. (2004) and Pretty et al. (1995).

This chapter uses similar approaches to provide a learning module for training activities centered on machinery manufacturers, NGOs, or other groups interested in learning how to use scaled technical designs. This information can be used to implement a one to two day training program that can be adapted to fit the needs of the user. The chapter: (1) outlines the objectives of the learning exercise; (2) presents issues related to the preparation to implement the program; (3) suggests suitable locations for conducting the module; (4) describes an active learning procedure to follow; (5) provides questions the instructor can use to stimulate discussion among program participants; 6) provides answers to commonly encountered questions from participants; (7) outlines the time required; and (8) lists the materials needed for the module.

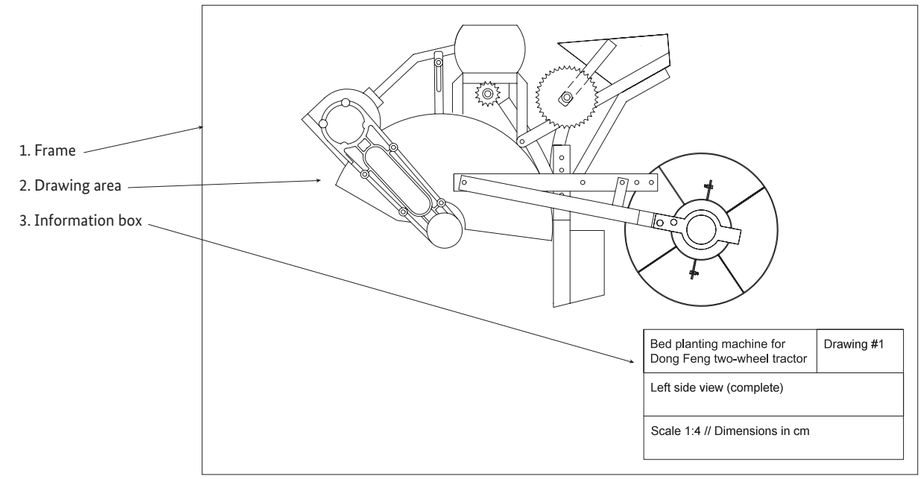

Figure 1. A graphical example of the key components that make up a scaled technical design.

The module was developed through pre-testing with a group of 12 agricultural machinery manufacturers in May 2013 at BARI in Gazipur, Bangladesh, after which it was redesigned and improved. It is important to note that this module is simply a guide. Users of this book who wish to modify these materials so that they suit other audiences are encouraged to do so.

Learning objectives

1. Agricultural machinery manufacturers (AMMs) should be able to interpret and read the information included in a technical drawing and then translate this information into a deliverable product.
2. AMMs should be able to understand the concept of scale and its implications for technical design and manufacturing.
3. AMMs should understand the improvements that the use of technical designs can have for the improvement of manufactured product quality and precision.

Preparation required

- The facilitator (teacher or trainer) of this learning module should contact and make arrangements with several manufacturers to participate in the training.
- We recommend a maximum group of no more than five manufacturers for effective facilitation.
- While the module can be used for one manufacturer alone, we see value in including multiple participants as this facilitates discussion and information exchange, which increases learning.
- Business owners are not always the manufacturers. Technical specialists and manufacturing foremen should attend trainings, as well as interested business owners.

Recommended location

This module requires a classroom where participants can follow lectures and hold discussions. The classroom should have large tables so participants can write notes and spread out technical designs or parts of machinery for the learning exercises.

Time requirement

This module generally requires six to eight hours including breaks for meals. If necessary, it can be split into theory and practical discussion or spread across two days. The module can easily be integrated into larger, modular learning curricula in courses focusing on agricultural mechanization or topics such as CA for example.

Materials required

1. A large screen and multimedia projector.
2. Laptop computer to connect to the multimedia projector.
3. Large tables.
4. Black or white board with chalk or markers.
5. Pencils and rulers (metric scale preferred) for each participant.
6. Notebooks for each participant.
7. A technical design exercise sheet (found at the end of this chapter).
8. Sample machinery pieces or objects to be used during the practical exercise (ideally those depicted on the example exercise sheet).
9. A facilitation assistant trained in the use of technical designs.
10. Printed copies of the instructions of the practical exercises.
11. Correctly sized handouts of the pages of this book.
12. Refreshments for participants.

Activity and learning procedure

1. Introduction to the theory of scaled technical designs

The facilitator should begin the workshop by creating discussion among the participants, asking them about their knowledge of and experience working with technical designs. He should ask if the participants are familiar with designs, to what extent, and if any of them might have used scaled technical designs in their manufacturing processes. If any of the participants have experience, they should explain their experiences. After handing out examples of technical designs, some questions to stimulate discussion could include the following:

- Do you or have you used technical designs in your company? How?
- Do you know how to interpret a technical design and use it?
- Do you know how to produce one to expand your business?

Following this discussion, the facilitator should proceed to share a standardized definition of a technical design. The key point to get across is that a technical design is:

- A scaled and precise representation of a real object.
- Because the design is scaled, any measurements appearing on the design are proportional to the dimensions of the real object.
- Therefore, technical designs are a tool that can help to increase the precision, quality, and the reproducibility of manufactured items. Their purpose is to standardize the manufacture of a product (in this case agricultural machinery).

Photo: Timothy J. Krupnik

Example of a training in Bangladesh.

Following the introduction of the definition of scaled technical designs, the facilitator should clarify the notion of standardization as the process that pursues technical standards to improve compatibility, repeatability and quality. Technical drawings are a key tool to improve standardization and normalization, which is the use under common agreements (usually legal) of certain rules and norms that guarantee the quality of the manufactured products, the possibilities of replacement, and coupling of products. It is important that the facilitator focuses on the principles behind normalization so that the participants work from a common definition. The concept of standardization or normalization is built upon these easy-to-understand themes:

- Common language.
- Standardization to help foster the exchange of ideas.
- Improved copying and mass deployment of manufactured objects or machines.
- Standardization and normalization to create basic and key references for a manufacturer's requirements.
- Standardization and normalization to improve the quality and precision of manufactured items. This will increase customers' interest, as products will be seen as having been produced under standard and high-quality requirements.
- Standardization and normalization to reduce manufacturing costs by improving efficiency in the use of materials and resources, including human labor.

2. What are the basic components of a scaled technical design?

The learning module here focuses on the technical aspects of scaled designs. This section should describe all the different parts and aspects that are necessary to develop a technical design, including their meaning and purpose. Participants should be supplied with a graphic example of a technical design, including the following critical parts:

- Frame
- Information box
- Technical design area
- Types of lines
- Views
- Symbols

A graphical example can be used to make things more understandable, as seen in Figure 1. Following this part of the training, we recommend a brief break for refreshments, as the next part of the training requires intense concentration on the part of all participants.

3. Understanding the concept of scale

It is critical for training participants to understand the concept of scale in technical designs and manufacturing. This central concept can be difficult to teach, requiring effort and patience from the facilitator. Because scale requires participants to think in abstract terms, it is not always easy for some manufacturers to understand. Hence, we recommend moving slowly in this part of the training and allowing sufficient time for participants to explore and ask questions until the concept becomes clear.

A good way to begin is to use the instructions from Chapter 1 (Instructions - How to use this book). Scale is carefully explained in Chapter 1 in a simple manner with a technical description, shown again in the four example calculations below, which can be written on the board for participants to view and discuss:

Example 1: If the scale on a technical design is 1:2, but a particular dimension on the design in question is 15 cm, use the following formula to determine the actual measurement:

Scale = (Measurement in the drawing)/(Real dimension) = 1/2 **(1)**

Using the information we have from the design, the facilitator then explains that it should be entered into the following formula:

(15 cm)/(Real dimension) = 1/2 **(2)**

By cross-multiplying the numerator of the scale fraction to the real fraction (15/1, which equals 15 cm):

15 cm x 2 = Real dimension x 1 **(3)**

And because the length of the drawing is 15 cm, we can then derive the following:

(Real dimension = (15 cm x 2))/1 = 30 cm **(4)**

The real dimension of the object is therefore 30 cm. The facilitator should clarify that the scale tells the size of objects in real life. In other words, the scale is the key for manufacturers to derive the actual size of an object to be produced from a technical drawing.

This is an example of a reduction scale, because the real dimension is larger than the measured dimension in the drawing. Reduction scales are used to represent objects whose size is larger than the paper on which they are represented. It is the most common kind of scale in agricultural engineering.

Magnifying scales are those where the object is very small and the representation enlarges its dimension on paper, so the size on the paper is larger than its real size. For example, a 2:1 scale will imply that the dimension on paper will be two times larger than the real size. This type is of scale is used mostly in mechanical engineering for detailed and precision manufacturing and design.

4. Exercises to understand the concept of scale: Mathematics

Following the introduction of the concept of scale, the facilitator can ask the participants to practice by working with different, simple scaled designs (Figures 2 and 3). These exercises can be done on the board and in participants' notebooks. After participants practice and begin to grasp the method of converting between scaled measurements and actual sizes, the facilitator should invite one or two participants to work through an example on the board. This is helpful because participants sometimes learn better from other participants than the facilitator. It also helps the facilitator gauge the level of understanding among the audience.

The facilitator should remember that the concept of scale is perhaps the most important thing to communicate in this learning module. It must be defined and described, explaining its use with theoretical and oral/visual examples with nearby objects in the classroom. The facilitator should move on to the next step in the module only if he is sure that the participants have grasped the concept and how to do the scale conversions. We have found it helpful to move from the abstract shapes depicted in Figures 2 and 3 to actual objects, such as the size of a bolt on a scaled drawing compared to the actual bolt (this can be supplied to the participants so they can measure it), or the size of the chair the participants are sitting on as depicted on a hand drawn technical scaled design, compared with actual measurements of the chair.

5. Moving from the concept of scale to integrated technical designs: Exercise 1

For this part of the learning module, we suggest having at least one person in addition to the facilitator, to assist. The facilitator(s) should divide the participants into groups of four

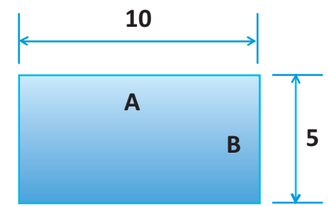

Scale	Actual measurement in the drawing	
	A	B
1:1	10	5
1:4	2.5	1.25
1:10	1	0.5

Figure 2. Visual example of an exercise that the facilitator can use for better comprehension of scale.

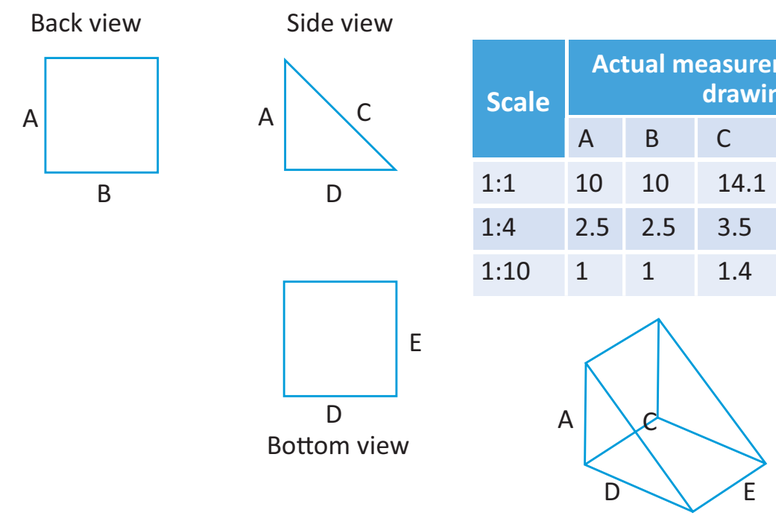

Scale	Actual measurement in the drawing				
	A	B	C	D	E
1:1	10	10	14.1	10	10
1:4	2.5	2.5	3.5	2.5	2.5
1:10	1	1	1.4	1	1

Figure 3. Graphic example of the representation of a figure and measurements in different scales.

persons maximum. Distribute the participants so that there is at least one in each group of slightly more skill or with prior knowledge of technical drawings, as a resource person for other group members.

All participants should have a pen or pencil, their notebooks, a ruler scaled in centimeters (or millimeters, if available), and a printed copy of an exercise sheet. This exercise sheet should consist of a technical design with all the elements except a few deliberately omitted dimensions (see the sample exercise sheet at the end of this chapter). This part of the module consists of asking

participants to read measurements from the sample technical design. Participants should use the ruler and measure on the printed sample design, and convert the technical design measurements to actual measurements according to the scale of the technical design. Participants should complete the exercise in perhaps 20 to 30 minutes, and then share the results with the other groups. The facilitator and the assistant(s) should help the participants to make the right interpretative measurements of the design and lead them through the exercise.

At the completion of the allotted time, the facilitators should check the results of each of the groups and confirm that they have the correct answers. It is very likely that participants will encounter problems understanding the concept of scale, so it will be good to have the materials and examples from the previous presentation on hand should the facilitators have to refer back to them. Where the participants are unable to come up with correct calculations, the facilitator should walk them through the process to clear up any doubts.

6. Moving from the concept of scale to integrated technical designs: Exercise 2

The facilitators should next have the participants perform the reverse conversion, scaling down from the real-life object to a technical design at a range of set scales. This time the facilitators should ask participants to work individually and share their results with the rest of the group. A new exercise sheet should be used, comprising a table divided into three columns: one with a 1:1 scale; one with a magnifying scale; and one with a reduction scale (Figure 4). Each participant or group of participants should be given a real object; in this chapter we use a tillage blade. Using a ruler or measuring tape, participants should measure the actual dimensions (scale 1:1) and fill in the other columns on the exercise sheet. In this way participants will learn how to measure and (re)scale repetitively. The time for this task should be 20 to 30 minutes.

Once all participants have completed the measurements and calculations, the facilitator should project a high-resolution digital copy of the technical design so participants can compare it with their exercise sheets. One participant from each group can be nominated to present his results. The facilitator can address errors, present the correct results, walk through the processes required, and answer participants' questions. The process can be repeated as many times as necessary and with different components of the sample machine, until the participants are confident that they can work with the technical designs and understand the scaled results.

7. Moving from the concept of scale to integrated technical designs: Exercise 3

To ensure that participants continue to work with scaled technical designs, a third exercise can be proposed as homework. The facilitator should distribute a technical design to each participant showing the construction of a small, simple object; in this chapter we provide an inverted 'T' tine (Annex 1), with all the details (dimensions, lines and parts of the object). Using this technical design, the participants should be able to develop measurements allowing the object to be manufactured from the design alone. Plans for this can be presented at a follow-up workshop on the topic. In our experience this approach allows participants adequate time to reflect on what they learned, to actively experiment with it on their own, and then to discuss with the original group of peers any problems encountered or new ideas.

Questions to stimulate discussion

- Why is it important to use technical designs to improve the manufacture of machinery?
- What is scale? How does it work?
- What are the main elements of a technical design?
- What is the role of manufacturers in normalization? How can normalization and standardization benefit manufacturers?
- Is there a difference between magnifying and reduction scale?
- What is the difference between a sketch or a drawing and a technical design?

Frequently asked questions from learners about technical designs

1. **Question:** I don't have access to a computer. Can I still use technical designs?

   Answer: Yes, technical designs are several hundred years old and have long been used in many areas of engineering and science. They are available on paper and are printed on a particular paper size and at a specified scale so that any person can translate the measurements on paper into actual dimensions of an object. So, the only requirement to use technical designs is to be able to read numbers and know how to use a scaled ruler.

2. **Question:** How does quality improve if I use a technical design?

   Answer: Since it is an actual copy of a real object, the closer that someone is able to reproduce in reality what is represented on the drawing, the closer that person is to creating a true copy of the original object. Therefore, the quality and precision of the original object will be improved and not distorted by human error.

3. **Question:** I use prototypes and models to build my machinery; why is a technical design better?

   Answer: A model or a prototype are references that can be misinterpreted, since they are not real copies of the original machine, and each manufacturer, technician, or worker will make his own interpretation or reading of them. If only prototypes are used, there is a high likelihood of small inconsistencies in the machinery manufactured. Conversely, a technical design has a single and universal interpretation, so possible errors in manufacture due to individual interpretation and later execution are eliminated, improving the quality of the product. A technical design also allows the manufacturer to check at any point of the manufacturing process if the objects or machines have the right dimensions and requirements for their intended purpose.

References

Defoer, T., Wopereis, M. C. S., Idinoba, P., Kadisha, T. K. L., Diack, S., Gaye, M. 2004. Curriculum for Participatory Learning and Action Research (PLAR) for Integrated Rice Management (IRM) in inland valleys of Sub-Saharan Africa. 179 Bouaké, Côte d'Ivoire: Africa Rice Center (WARDA) and IFDC -International Center for Soil Fertility and Agricultural Development.

Kolb, D. A. 1984. Experiential learning: experience as the source of learning and development. Prentice-Hall, New Jersey. p. 256.

Krupnik, T. J., Shennan, C., Settle, W. H., Demont, M., Ndiaye, A. B., Rodenburg, J. 2012. Improving irrigated rice production in the Senegal River Valley through experiential learning and innovation. Agricultural Systems. 109:101-112.

Pretty, J. N., Guijt, I., Scoones, I., Thomoson, J. 1995. A trainer's guide for participatory learning and action. London: Sustainable Agriculture Program, International Institute for Environment and Development.

Pretty, J. N. 1995. Participatory learning for sustainable agriculture. World Development. 23:1247-1263.

Settle, W. Garba, M. H. 2011. Sustainable crop production intensification in the Senegal and Niger River basins of francophone West Africa. International Journal of Agricultural Sustainability. 9: 171-185.

van den Berg, H. and Jiggins, J. 2007. Investing in farmers - The impacts of farmer field schools in relation to integrated pest management. World Development. 35: 663-686.

Dimension	Scale 1:1 (cm)	Scale 1:2 (cm)	Scale 4:1 (cm)
A			
B			
C			
D			
E			

Figure 3. Answer Sheet: Practical Exercise 2. To be distributed to participants. The drawing used in this exercise should have some of its dimensions listed accordingly so they match with the specifications in the answer sheet.

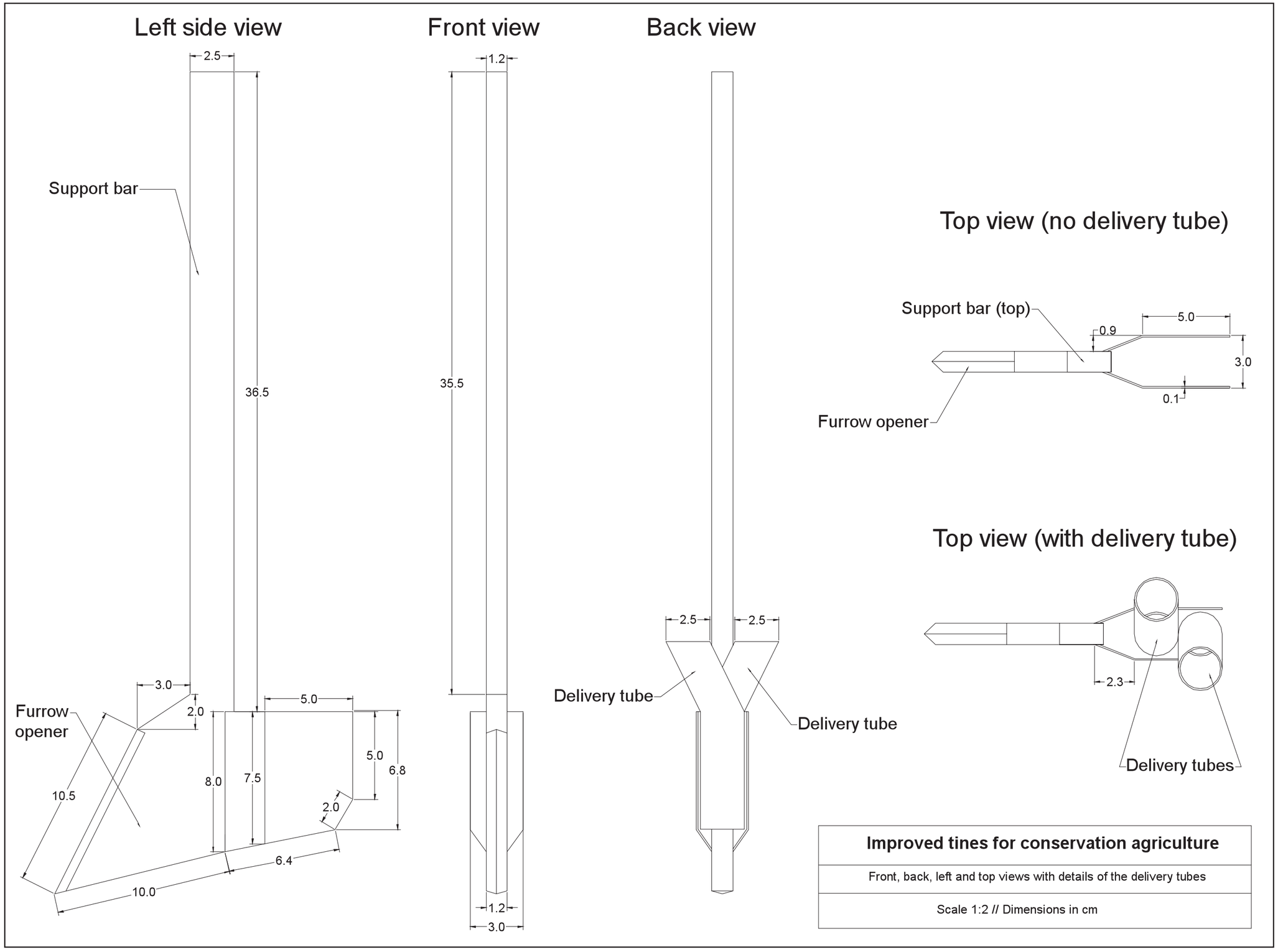

Annex 1. Furrow opener design. For practical exercise of the training, it can be used to propose that manufacturers build a piece of machinery out of the drawing and check their understanding of the training.

Glossary

Bearing

Part of a machine that bears the load, induces movement in a single direction, and reduces friction between moving parts and stationary parts. Examples are ball bearings and roller bearings.

Rotary blade

In agricultural engineering, a metallic implement that resembles a knife that is attached to a rotary axle that contacts and moves the soil, enabling tillage. Blades can be of numerous shapes and sizes, depending on the tillage operation required. Blades are usually attached to the rotary axle through insertion into a female holder, into which they are bolted. The cavity in the female holder is proportional to its size and shape, and should be designed to reduce slippage between the blade and the holder.

Bushing

Like a bearing, a bushing is designed so that it uses very smooth lubricated surfaces to bear the weight and reduce the friction between it and a similarly smooth rotating shaft. A bushing can also be a sleeve that protects cables as they pass through a machine element.

Calibration and calibrate

Adjustment of a particular part of a machine so that it can operate with the desired accuracy. In agricultural machinery, farmers can calibrate seed and fertilizer drills to adjust the metering of seed and fertilizer, which may be applied to the field. Other common agricultural implements that requires calibration are backpack and tractor-mounted sprayers which spray insecticides and herbicides.

Clod

A chunk of soil, often clay or partly clay, that can be formed when soil is slightly moist or where large aggregates exist, especially where tillage is practiced.

Clodding (of soil)

The process of clod formation resulting from tillage or land preparation practices.

Coleoptile

A protective sheath covering the emerging shoot in grass species.

Conservation agriculture

A set of management and production principles that builds on systems agronomy research to simultaneously boost productivity and reduce resource degradation in cropping systems. Three general principles of conservation agriculture are: (1) dramatic reduction or total elimination of soil tillage; (2) retention of crop residues or the maintenance of living or dead mulches to cover the soil surface; and (3) economically viable crop rotations.

Cup type seed meter

A seed meter that delivers seeds that are carried by a series of small cups attached to a turning plate, roller or disk that intersects the seed box on a seeding implement. Each cup captures a particular number of seeds, carries them forward, and drops them into a seed delivery tube.

Drill

A device used to mechanically sow seeds, fertilizers, or other materials by positioning them and directly inserting them into furrows in the soil. Drills usually use seed meters that do not necessarily control seed-to-seed distances precisely and therefore are used for crops that do not need seed singulation. Drills can be driven by humans, animals, or machines. Most drills are outfitted with a mechanism to close the soil over the furrow.

Diffuser vane

A vane is a type of blade attached to a rotating wheel or axis. A diffuser vane is used in irrigation machinery and changes the direction of water flow by converting water velocity into pressure. In axial flow pumps, diffuser vanes counteract the pattern of water swirl flow inside the pump and improve water flow and delivery.

Field capacity

The quantity of water or moisture that a particular soil can hold by capillary action in meso- and micro-pores after drainage has ceased. Field capacity is measured at a matric potential generally ranging from −10 to −30 kPa.

Furrow

A narrow trench cut into the soil into which seed, fertilizer, or other inputs are placed.

Gauge

An instrument used to measure the quantity or level of a variable of interest. In the context of this book, gauge refers to the instruments used to measure water flow (usually in liters per second) generated by irrigation equipment.

Hitch

In agriculture a hitch is a part of any self-propelled tractor that couples to a particular non-propelled device (e.g., seed-fertilizer drill, bed planter, etc.). A tow hitch is a device to connect a vehicle to an attachment or trailer that allows pivoting between the vehicle and the towed device.

Housing

An enclosure or sleeve in which a shaft, gears, or other moving parts turn. The housing protects, covers, and supports the moving parts.

Jig

A device that holds an object in a specific position that allows manufacturers to manipulate the object during production. Jigs are used in agricultural machinery manufacturing to hold specific pieces of metal in place, while secondary pieces of metal are welded to them.

Knives

See the definition of rotary/rotavator blade, as the two terms are used interchangeably.

Knob

A round handle that can be attached to seed or fertilizer drills to allow adjustment and calibration of fluted roller metering systems.

Rotovator/rotary tiller blade

L-type blade

L describes the shape of the blade. Right-shaped blades penetrate the soil generally at a right angle, resulting in increased tillage compared to J-shaped or straight blades. L-shaped blades are commonly attached to rotovators. L-type blades are the most common blades found on western-and Indian-made four-wheel tractor rotovators.

J-type blade

The most common blade found on two-wheel tractors and Chinese-made four-wheel tractor rotovators/rotary tillers. The end points of these blades enter the ground last while their sharpened leading edges are first to slice into the ground. The "J" refers to the bent tip of the blade, which lifts soil up and out of the ground causing maximum movement or mixing or inversion of the soil.

C-type blade

C-type or or chisel blades are used on two-wheel tractors in dry, hard soil conditions where J-type blades have more difficulty. The simplest of all blades, C-type blades are straight and have no curved section to lift soil out of the ground.

The point of the blade enters the ground first, as opposed to the J-type blades whose leading edge enters first and the point enters last. C-type blades result in the least inversion of the soil.

Furrow opener

A device found on most seed and/or fertilizer drills that opens the furrow into which seeds and fertilizer are placed (banded together) in narrow slits into the soil. Openers come in many shapes: e.g., a large wedge, single disks, double disks, and simple points at the end of a shank. In southern Bangladesh improved "inverted T" openers are common under ZT management as they are inexpensive and can minimize soil movement. More expensive designs give wider separation within the furrow of seed and fertilizer - an important advantage when high levels of potentially seed-damaging nitrogen fertilizer are banded near the seed.

MIG welding

An electric arc is formed between a consumable wire electrode and the metallic piece or pieces to be welded. The joint is made by melting the metallic pieces and the wire electrode.

Plant population

The number of established and living crop plants within a particular defined area, for example within 1 m2.

Planter

Planters differ from seed drills in that they are normally used for larger seeds such as maize, beans, etc., that require wider row widths (>40 cm) and seed singulation within the rows. Such planters use seed meters like flat, incline, and vertical plates or cup type meters that can place 1-2 seeds at set specific distances.

Press wheel

A wheel attached to the back of a seed and/or fertilizer drill that pushes soil back down over seed and/or fertilizer, thereby closing the soil. Press wheels follow the openers and are usually the last implement on a drill. Press wheels can be of various sizes and materials, though they are commonly made of metal, rubber or plastic.

Puddling

The act of repetitive tillage under flooded conditions to prepare rice fields for planting. Puddling destroys soil structure and disperses soil aggregates. Rice farmers practice puddling to control weeds and also create a plow pan that reduces the downward percolation of water in the field. The drawbacks to puddling include high water requirements, use of considerable tractor fuel for repetitive tillage, damage to soil structure, and reduced root penetration for other crops following the rice crop. due to lowered soil porosity.

Residue

Crop residues (also known as agricultural biomass) are the non-harvested portions of the crop left in the field, usually referred to as straw. The two categories of residue are:

Loose residue - the biomass has been cut and lays scattered on the field.

Anchored residue - straw is still attached to the root system and thus anchored into the ground. Only the uncut, still-standing stalks remain in the field. The differences here are that some blade type openers can pass through and plant into anchored residue but will rake or jam with the loose residue.

Both anchored and loose residues may be referred to as mulch.

Rotovator

A tillage machine used for rototilling. Rotovators can be self-propelled or attached to a tractor.

Rotovator shaft

An axle-like shaft of the rotovator to which all blades are mounted perpendicular to the shaft. The shaft turns at various speeds parallel to the soil surface. When the blades contact the soil, tillage is performed.

Seeder tubes

Flexible plastic tubes, usually 2-3 cm in diameter, that originate at the base of seed and/or fertilizer boxes and deliver seed and/or fertilizer into the soil after release from the metering system. If the tube diameter is too small, the seeds/fertilizer may "bridge" and cause jams. Seeder tubes need to be nearly perpendicular to the ground to avoid jamming.

Shaft

A metal bar that joins parts of a machine or an engine to pass power or movement from one part to the other. Shafts transfer power and movement to seed and/or fertilizer metering systems.

Slots

See furrow.

Storage tanks or hoppers

Containers attached to a tractor that hold seed, fertilizer, or other materials before they are transferred to a delivery tube for placement into the soil.

Strip tillage

A tillage practice where narrow strips of soil are tilled, and where seed and/or fertilizer is placed below the soil surface. Sometimes referred to as zone tillage, strip tillage is commonly practiced under conservation agriculture, but newer Asian-made seed drills (especially for two-wheel tractors) can open as narrow a strip as some inverted T openers and can sow into higher levels of surface residue than blade- or knife-type openers.

Sweep blade

A specific kind of blade designed to facilitate interline weeding through tillage.

Swirl

Non-linear movement of water, characterized by spiral or corkscrew patterns. In the case of the axial flow pump, a swirl is created by the energy transferred to water by the impeller that pushes water up through the pipe that is the body of the pump itself. If the swirl of waste is not mediated (straightened), it can cause pump damage and efficiency losses.

TIG welding

Tungsten inert gas (TIG) welding uses a tungsten electrode to join pieces of metal. TIG welding is generally of superior quality to MIG welding, and is recommended for the machinery shown in this book.

Tine, shank or blade holder

The arm that holds a stationary blade or knife or other soil engagement tool.

Toolbar

In the USA and Europe, toolbars are diamond-shaped and in Asia welded square metal bars form a frame that is attached via a simple or 3-point hitch to a tractor. These bars hold in place various tools and implements (cultivators, disks, furrow openers, etc.). Usually the tools have bolted brackets that allow their placement to be adjusted, permitting the versatile configuration of the machine.

Tractor pass

The complete passage of a tractor across the entire field surface. A single pass may require multiple runs of the tractor across the field with a turn at each end, until the full field area has been covered.

Transplanting

The physical planting of seedlings by hand or machine into the field.

Turn-around time

Time, usually measured in days, between the date when one crop is harvested and the next one is sown in the same field.

Vane

A flat piece of metal attached to a rotating wheel or other axis. In the case of irrigation pumps, vanes move by the force of the pump itself. As water intersects with the vane, it is pushed forward as a result of the vane's rotating force.

V-belt

A belt, usually made of rubber, used for the transmission of power between two rotating shafts. V-belts have a cross section with the shape of a 'V.' The V-shape allows their placement in a "V" belt pulley casing, which increases the area of contact and friction between the belt and pulley, thereby reducing the potential for belt slippage during machine operation.

Zero tillage

Also known as direct seeding (Australia) and no-till (USA), zero tillage is the drilling or planting of seed and/or fertilizer into the soil with little to no land preparation at all. Zero tillage is characterized by a single pass of the tractor or animal driven drill, during which all seeding is completed.

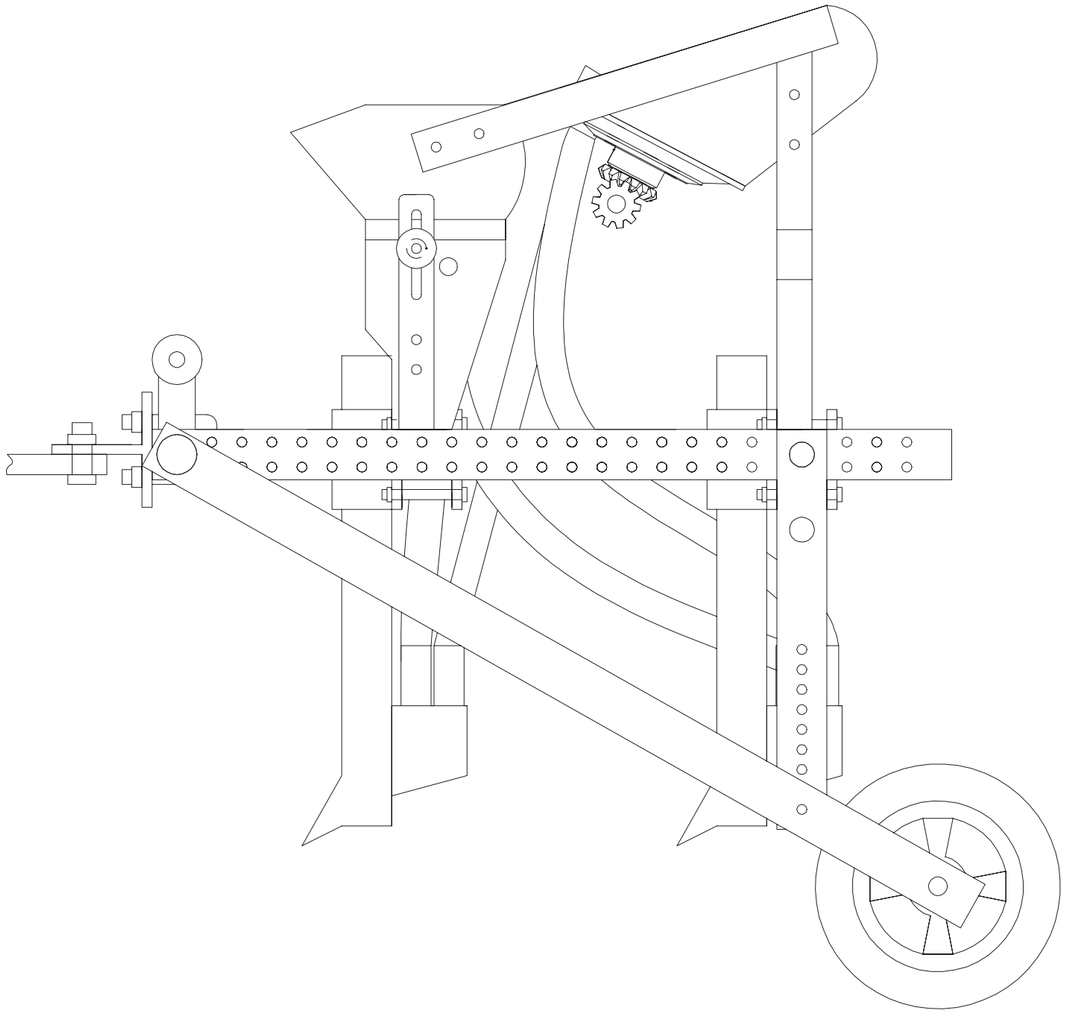

About the authors

- Dr. Timothy J. Krupnik is a Systems Agronomist at the International Maize and Wheat Improvement Center (CIMMYT) in Bangladesh, where he manages a portfolio of applied research initiatives that involve farmers in the participatory design, management, and evaluation of on-farm cropping system trials examining improved nutrient, water, and resource conserving management practices, as well as scale-appropriate farm machinery. He holds a Ph.D. in Environmental Studies with emphasis in Agroecology, and an M.Sc. in International Development, from the University of California at Santa Cruz, and Davis, respectively. Dr. Krupnik is currently the project leader of the USAID-funded Cereal Systems Initiative for South Asia Mechanization and Irrigation (CSISA-MI) initiative. Before working at CIMMYT, he was affiliated with the Africa Rice Centre and worked in West Africa on water saving and productivity in irrigated rice systems.

  Address: House 10/B, Road 53, Gulshan 2, Dhaka 1213, Bangladesh
  Email: t.krupnik@cgiar.org
  Mobile: +88-0175-556-8938
  Skype ID: timothy_krupnik

- Santiago Santos Valle works in the area of technical support for agriculture and environment in developing countries. He holds an M.Sc. in Agricultural Development from the University of Copenhagen (Denmark) and a Master in Agricultural Engineering from the Universidad de León, Spain. He has been cooperating with CIMMYT-Bangladesh as consultant as part of the EU-funded Agriculture and Nutrition Extension Project (ANEP) and also the USAID- and Bill & Melinda Gates Foundation-supported CSISA project. In Bangladesh he assists in research on new technologies for rural mechanization, capacity building in manufacturing, research and design processes and technical support to project leaders scaling out scale-appropriate farm machinery.

  Address: Rosenørs Allè 55, st. th. 2000 Frederiksberg. Denmark
  Email: ssantosvalle@gmail.com
  Mobile: +34-649516139 // +45-60662966
  Skype ID: jakobsenuco

- Dr. Md. Israil Hossain is Principal Scientific Officer and head of the BARI Regional Wheat Research Centre in Rajshahi, Bangladesh. Currently he is involved in the development of seeding implements , including strip till drills, zero till drills, and bed planters. Working for BARI since 1989, he trained at reputed international institutions such as the Tsukuba International Centre (Japan) and CIMMYT, and has contributed to and presented many research papers in national and international conferences such as WCCA, CIGR and the Rice-Wheat Consortium.

  Address: Regional Wheat Research Centre, Bangladesh Agricultural Research Institute (BARI). Shyampur, Rajshahi, Bangladesh
  Email: mdisrail@gmail.com
  Mobile: +88-01713363630

- Since January 2010, Dr Andrew McDonald has served as Regional Cropping Systems Agronomist for South Asia with the International Maize and Wheat Improvement Center (CIMMYT). Prior to joining CIMMYT, he was a research scientist at Cornell University (USA) specializing in the role of climate and soil factors on crop growth, yield variability, and interactions with pests. McDonald has been involved with CSISA since joining CIMMYT, and currently serves as the project leader for the integrated biophysical and socioeconomics CSISA team working across Bangladesh, India and Nepal.

  Address: CIMMYT South Asia Regional Office
  P.O. Box 5186
  Singha Durbar Plaza Marg Bhadrakali, Kathmandu, Nepal.
  Email: a.mcdonald@cgiar.org
  Mobile: +977-1-4269564
  Skype ID: ajmcdonald17

- Scott Justice has been living in South Asia for the last 17 years and works in promotion, research, and publications on small farm mechanization in South Asia, Africa, and more recently in East Asia. He currently serves as an agricultural mechanization specialist for CIMMYT in Nepal.

  Address: CIMMYT South Asia Regional Office
  P.O. Box 5186
  Singha Durbar Plaza Marg Bhadrakali, Kathmandu, Nepal.
  Email: s.justice@cgiar.org
  Mobile: +977-9851027678
  Skype ID: mmcjustice

- Dr. Mahesh. K. Gathala works as a cropping systems agronomist with CIMMYT-Bangladesh. He earned his Ph.D. in Soil Science from Maharana Pratap Agriculture University, Udaipur. Dr. Gathala has research, extension and administrator experience of more than 14 years in conservation agriculture-based resource-conserving technologies, efficient cropping systems, and nutrient and irrigation management with CIMMYT/IRRI-India /Rice Wheat Consortium (RWC) and in efficient resource conserving technologies at the Indian Council of Agricultural Research. He has working experience with the national and international scientific community and with the private sector in strengthening partnerships with stakeholders for widespread delivery of technologies.

  Address: House 10/B, Road 53, Gulshan 2, Dhaka 1213, Bangladesh
  Email: M.Gathala@cgiar.org
  Mobile: +88-0175-557-7390
  Skype ID: mgathala

USAID FROM THE AMERICAN PEOPLE

This project is funded by
The European Union

Australian Government
Australian Centre for
International Agricultural Research

An open-source publication targeted to machinery manufacturers, engineers, researchers and development practitioners, this book describes and provides technical designs for small-scale agricultural machinery developed or produced in Bangladesh to support the sustainable intensification of agriculture by smallholder farmers. The focus is on smart, scale-appropriate equipment — particularly for use with two-wheel hand tractors suited for the small plots typical throughout Bangladesh, but also in many countries where smallholder farmers predominate. Most of the machinery is designed for use with conservation agriculture crop management practices and allows precise and timely seeding and fertilization of crops with reduced soil disturbance. Each chapter includes written descriptions and photographs of the machines, outlining their purpose, performance and field use, followed by detailed, to-scale technical designs and other information to facilitate production of standardized copies or improvements in the original designs. The implements described include zero tillage and strip tillage seed and fertilizer drills, bed planters, axial flow irrigation pumps, strip tillage blades, improved furrow openers and seed metering mechanisms – all specialized for use with two-wheel tractors.

International Maize and Wheat Improvement Center
Km, 45 Carretera Mexico - Veracruz / El Batán
Texcoco, Edo. de Mex.
C.P. 56130 Mexico
www.cimmyt.org

Bangladesh Agricultural Research Institute
Joydebpur, Gazipur 1701, Bangladesh
www.bari.gov.bd

9 786078 263332

CIMMYT

IRRI
INTERNATIONAL RICE RESEARCH INSTITUTE

WorldFish

iDE
Cultivating Potential